ISOMAG

The friendly magmeter

OPERATING AND MAINTENANCE MANUAL

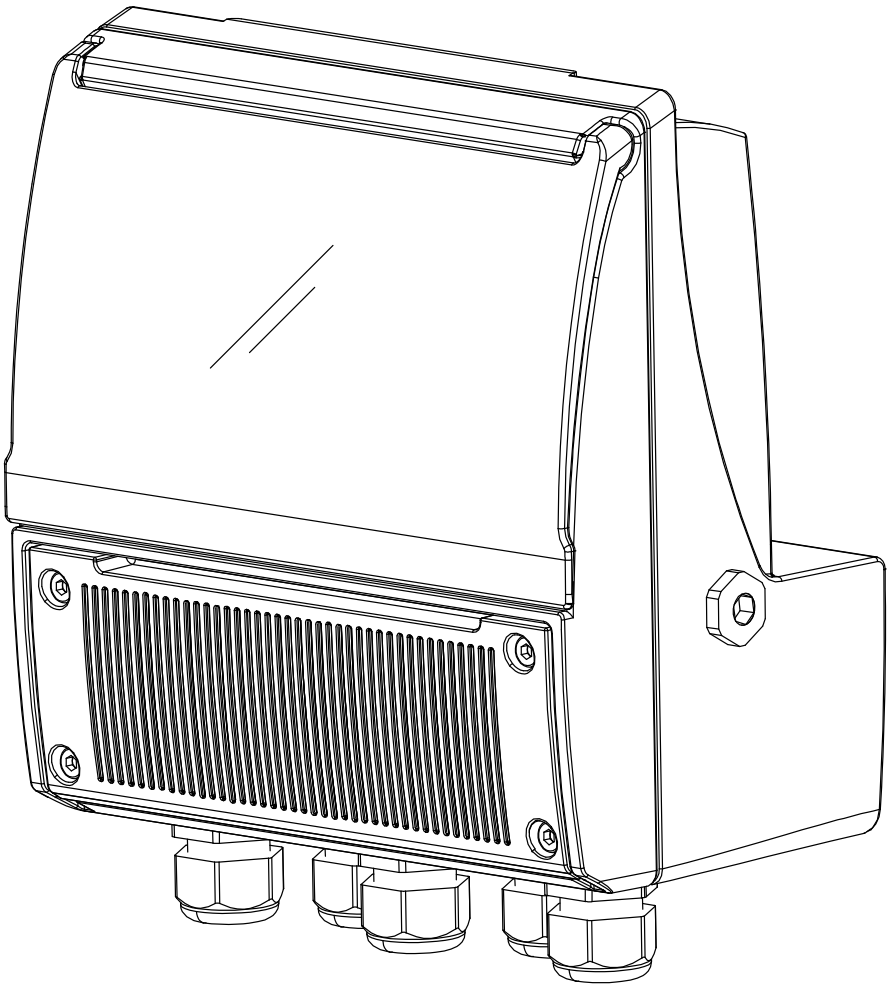

MV210

CE

ISOIL INDUSTRIA

Release number: **210_EN_IT_IS_R1_1.02.0**

The characters of file name in bold type indicate the software version which the manual refers to; it is visualized at the instrument start up, or by specific function on DIAGNOSTIC menu.

The reproduction of this manual and any supplied software is strictly forbidden.

INDICE

MV210 1
SAFETY INFORMATION 3
INTRODUCTION 3
SAFETY CONVENTION 4
DATA PLATE 5
AMBIENT TEMPERATURE 5
TECHNICAL CHARACTERISTICS 5
DIMENSIONS 6
SEPARATE VERSION 7
HORIZONTAL VERSION 8
VERTICAL VERSION 8
MV210 CONSTRUCTION 10
INTERNAL LAYOUT 11
ELECTRICAL CONNECTION AND GROUNDING INSTRUCTIONS 12
INTERNAL LITHIUM BATTERY 13
DIGITAL INPUT ON/OFF OPERATION 15
OUTPUTS WIRING 16
DIGITAL OUTPUTS 16
ANALOG OUTPUTS 16
RS485 MODBUS MODULE (OPTIONAL) 17
CONNECTORS MIL 18
MEANING OF FLAGS 21
MEANING OF LED COLORS 21
ACCESS VIA KEYPAD 22
ACCESS VIA MCP INTERFACE (VIRTUAL DISPLAY) 22
ACCESS TO THE CONFIGURATION MENU 22
FLOW RATE VISUALIZATION 23
FLOW RATE ALERT 23
QUICK START MENU 23
ACCESS CODE SET : MENU 13 SYSTEM 24
RESTRICTED ACCESS SET : MENU 13 SYSTEM 24

The manufacturer guarantees only English text available on our web site www.isoil.com

CONVERTER ACCESS CODE 24
FUNCTIONS MENU 27
FUNCTIONS DESCRIPTION 32
MENU 1 - SENSOR 33
MENU 2 - UNITS 36
MENU 3 - SCALE 38
MENU 4 - MEASURE 40
MENU 5 - ALARMS 42
MENU 6 - INPUTS 43
MENU 7 - OUTPUTS 44
BATCHING 45
MENU 8 - COMMUNICATION 50
MV210 MODBUS PROTOCOL 50
MENU 9 - DISPLAY 53
MENU 10 - DATA LOGGER 54
MENU 11 - FUNCTION 61
MENU 12 - DIAGNOSTIC 62
MENU 13 - SYSTEM 65
MENU 14 - FILE (ONLY MCP) 71
MENU 15 - PROCESS DATA (ONLY MCP) 73
METER DATA 75
B.I.V. (BUILT-IN VERIFICATOR) 76
SOFTWARE ISOBIV 79
ALARM MESSAGES (CAUSES AND ACTIONS TO BE TAKEN) 80
ERROR CODE TEST SYSTEM OF SENSOR 81
MANUAL REVIEWS 83

The manufacturer guarantees only English text available on our web site www.isoil.com

INTRODUCTION

- These operating instructions and description of device functions are provided as part of the scope of supply.
- They could be modified without prior notice. The improper use, possible tampering of the instrument or parts of it and substitutions of any components not original, renders the warranty automatically void.
- The flow meter realizes a measure with liquids of conductivity greater than 5µS/cm in closed conduits, and is composed of a converter (described in this manual) and a sensor (refer to the specific manual).
- The converter could be coupled directly on the sensor (compact version) or coupled to the sensor by cable supplied with it (remote version).

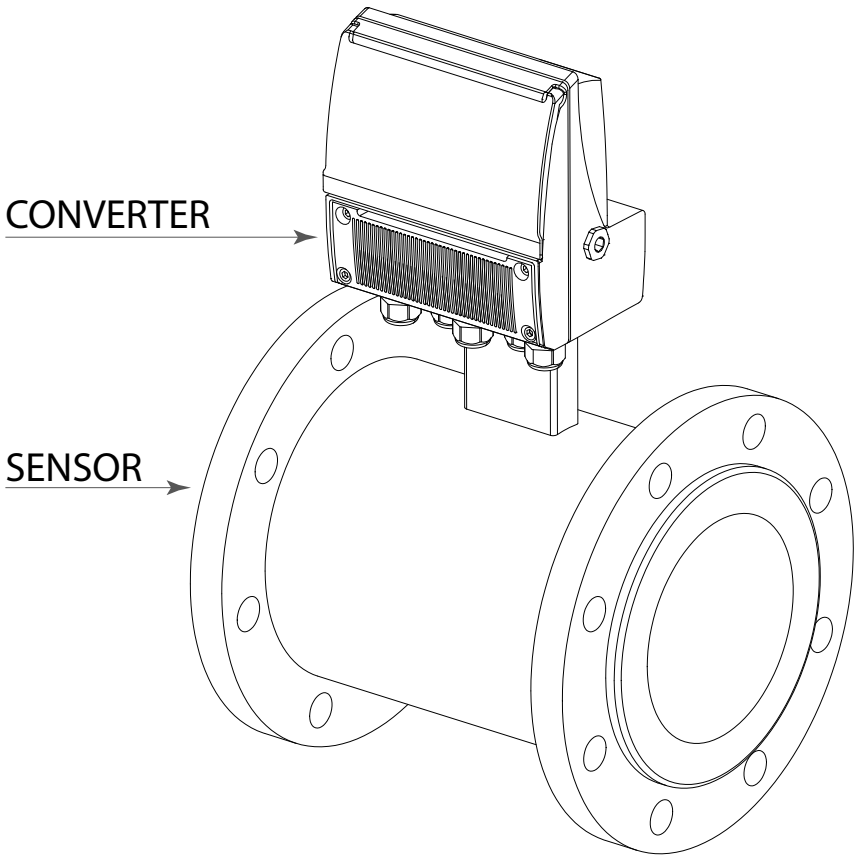

The manufacturer guarantees only English text available on our web site www.isoil.com

SAFETY INFORMATION

Any use other than described in this manual affects the protection provided by the manufacturer and compromises the safety of people and the entire measuring system and is, therefore, not permitted. The manufacturer is not liable for damaged caused by improper or non-designated use.

- Transport the measuring device to the measuring point in the original packaging. Do not remove covers or caps until immediately before installation. In case of cartons packaging it is possible to place one above the other but no more than three cartons. In case of wooden packaging do not place one above the other.
- Disposal of this product or parts of it must be carried out according to the local public or private waste collection service regulations.
- The converter must only be installed, connected and maintained by qualified and authorized specialists (e.g. electrical technicians) in full compliance with the instructions in this Operating Instruction, the applicable norms, legal regulations and certificates (depending on the application).

- ❑ The specialists must have read and understood these Operating Instructions and must follow the instructions it contains. The Operating Instructions provide detailed information about the converter. If you are unclear on anything in these Operating Instructions, you must call the ISOIL service department.
- ❑ The converter should only be installed after have verified technical data provided in these operating instructions and on the data plate.
- ❑ Specialists must take care during installation and use personal protective equipment as provided by any related security plan or risk assessment.
- ❑ Never mount or wire the converter while it is connected to the power supply and avoid any liquid contact with the instrument's internal components. To connect remove the terminals from the terminal block.
- ❑ Before connecting the power supply check the functionality of the safety equipment.
- ❑ Repairs may only be performed if a genuine spare parts kit is available and this repair work is expressly permitted.
- ❑ For the cleaning of the device use only a damp cloth, and for the maintenance/repairs contact the service center (for details see the last page).

Before starting up the equipment please verify the following:

- ❑ Power supply voltage must correspond to that specified on the data plate
- ❑ Electric connections must be completed as described
- ❑ Ground (earth) connections must be completed as specified

Verify periodically (every 3-4 months):

- ❑ The power supply cables integrity, wiring and other connected electrical parts
- ❑ The converter housing integrity
- ❑ The suitable tightness of the sealing elements
- ❑ The front panel integrity (display and keyboard)
- ❑ The mechanical fixing of the converter to the pipe or wall stand

The manufacturer guarantees only English text available on our web site www.isoil.com

SAFETY CONVENTION

DANGER ELECTRIC SHOCK	WARNING	PRECAUTIONS	ATTENTION

TECHNICAL CHARACTERISTICS

Electrical Characteristic

Converter classification: class I, IP67/68 for aluminum and PA6 housing, installation category (overvoltage) II, rated pollution degree 2.

Power supply versions	Power supply voltage	Power supply frequency	Min Power	Max power
HV	100-240V~	45-66HZ	1,5 W (Sensor only)	5 W (all Loads)
LV	24-36V ⎓	//		
	24-36V~	45-66HZ		
LLV	12-48V ⎓	//		

- ❑ Voltage variations must not exceed ±10% of the nominal one.
- ❑ Input/output insulated up to 500V.
- ❑ The output 4-20mA (optional) is electrically connected to the ON/OFF outputs and the output power supply (24V ⎓).
- ❑ Version LV/LLV : inrush current < 20A
  Version HV : inrush current < 25A

Environmental Use Conditions

- ❑ The converter can be installed internally or externally
- ❑ Altitude: from –200m to 4000m (from -656 to 6560 feet)
- ❑ Humidity range: 0-100%

AMBIENT TEMPERATURE				
	Aluminium		Reinf. Nylon	
	Min*	**Max**	**Min***	**Max**
°C	-20	+ 60	-10	+ 50
°F	-4	+140	+14	+122

ATTENTION

The battery will not be charged outside the below limits :

- ❑ T board MV210 < 0 °C
- ❑ T board MV210 > 50 °C

If the converter is supplied in compact version (converter over the sensor), consider the ambient temperatures more restrictive, otherwise refer to the relevant manuals.
* For discontinuous use, a thermostat heat source installation may be necessary.

Data Plate

The instrument label contain the following information:

- ❑ MODEL: Convert Model
- ❑ S/N: Serial Number of the converter
- ❑ SUPPLY: Main power supply
- ❑ Hz: Supply frequency (AC)
- ❑ POWER: Maximum power consumption
- ❑ IP: Protection grade
- ❑ T: Operation temperature
- ❑ COUPLING: Serial number of sensor coupled
- ❑ ITEM: Free for user

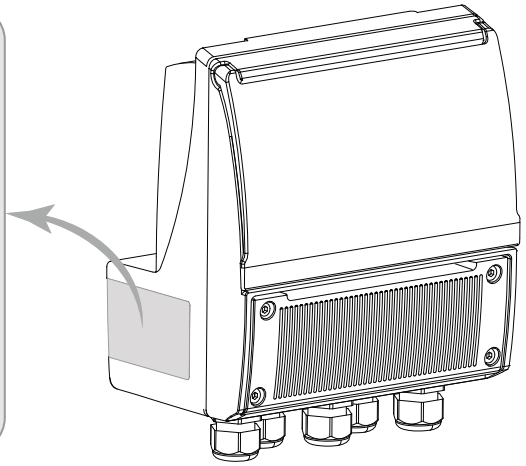

The manufacturer guarantees only English text available on our web site www.isoil.com

DIMENSIONS

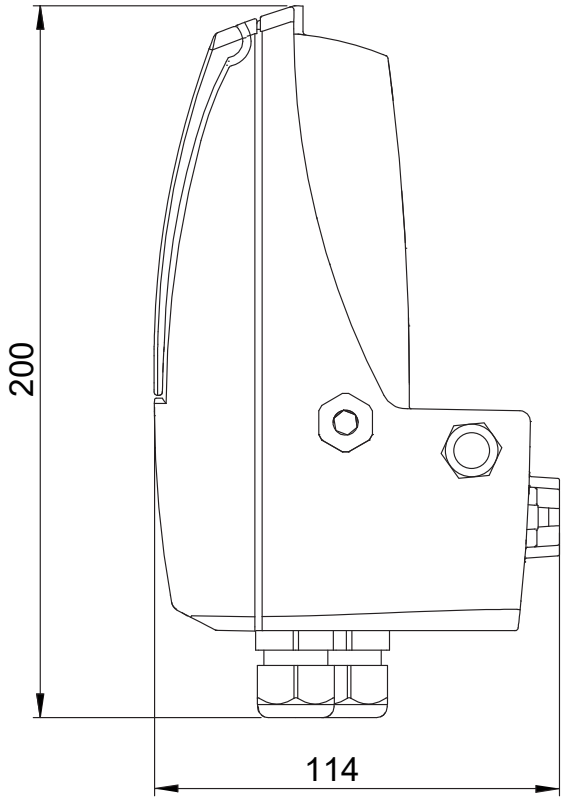

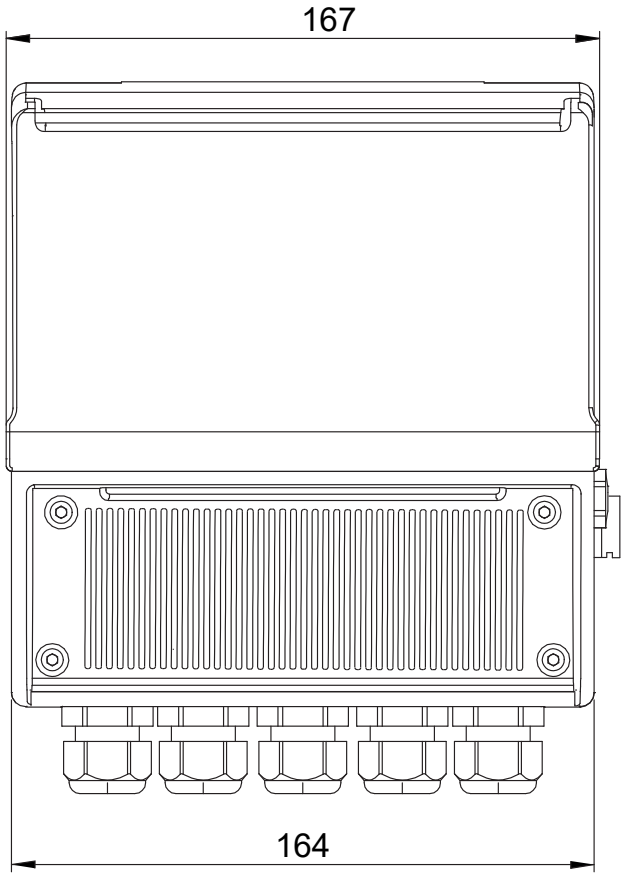

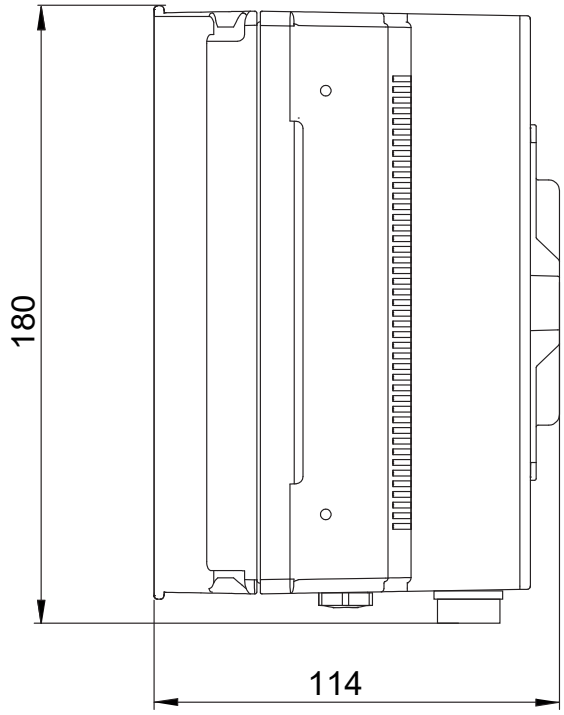

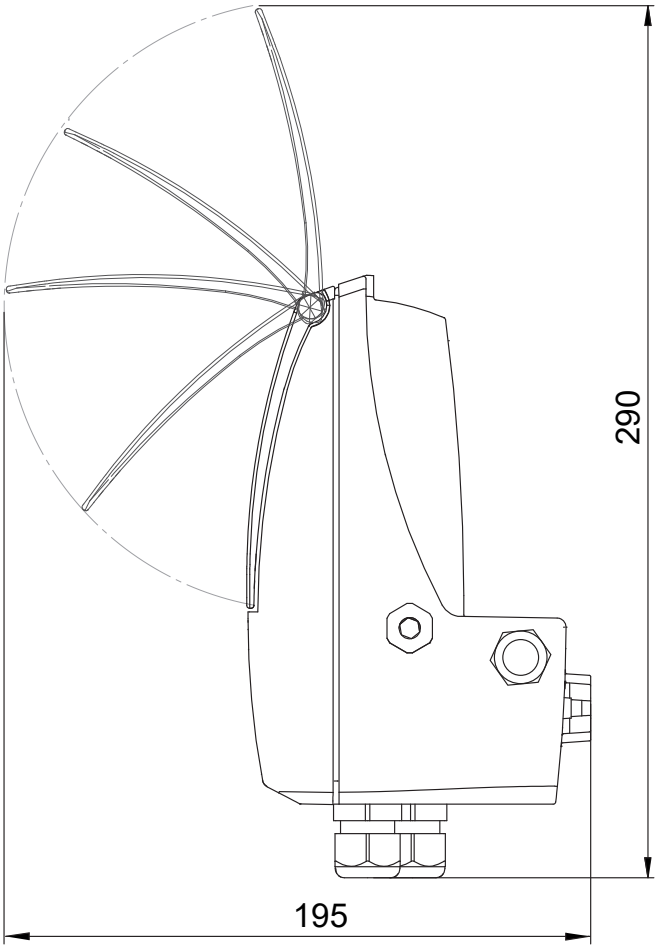

The manufacturer guarantees only English text available on our web site www.isoil.com

Separate Version

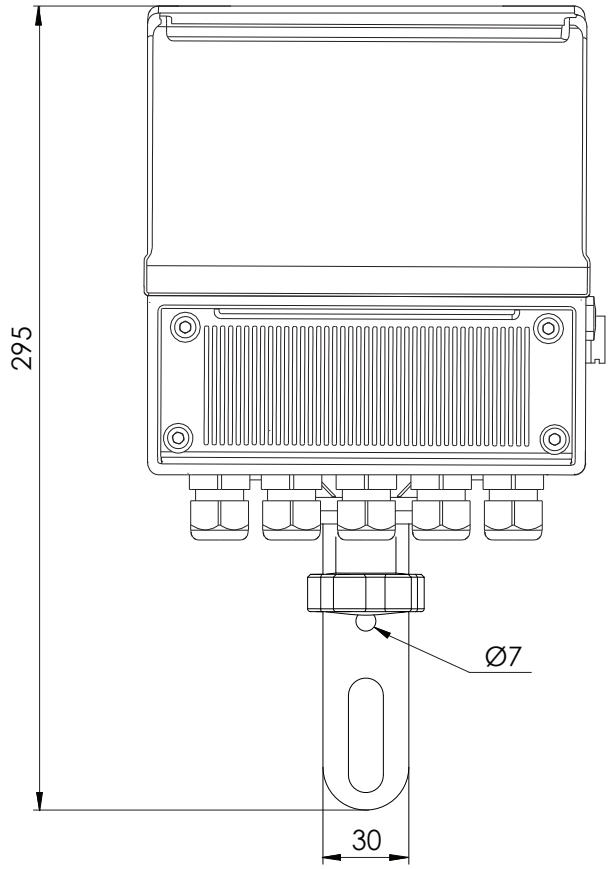

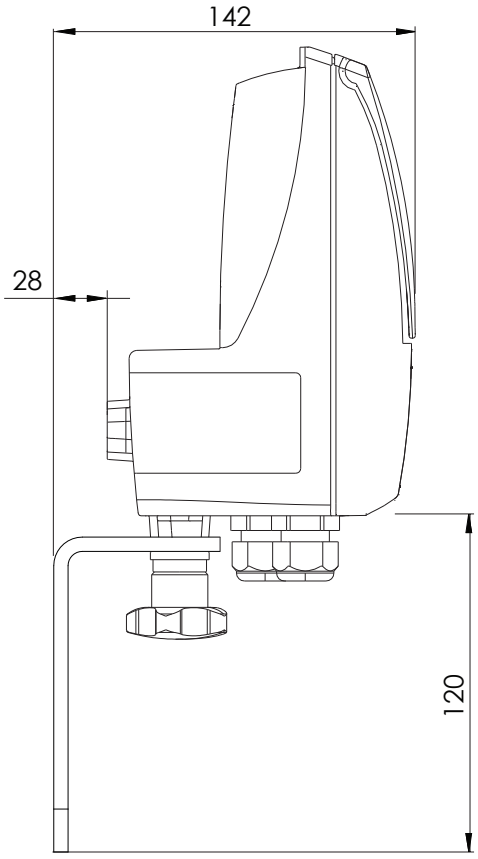

The manufacturer guarantees only English text available on our web site www.isoil.com

HORIZONTAL VERSION

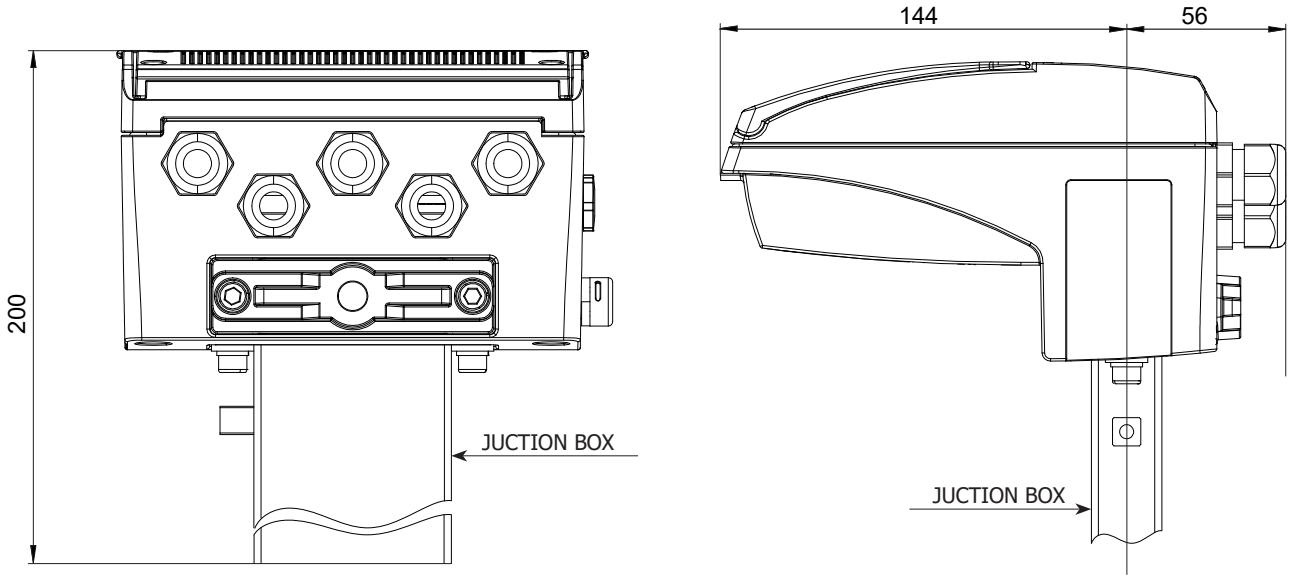

VERTICAL VERSION

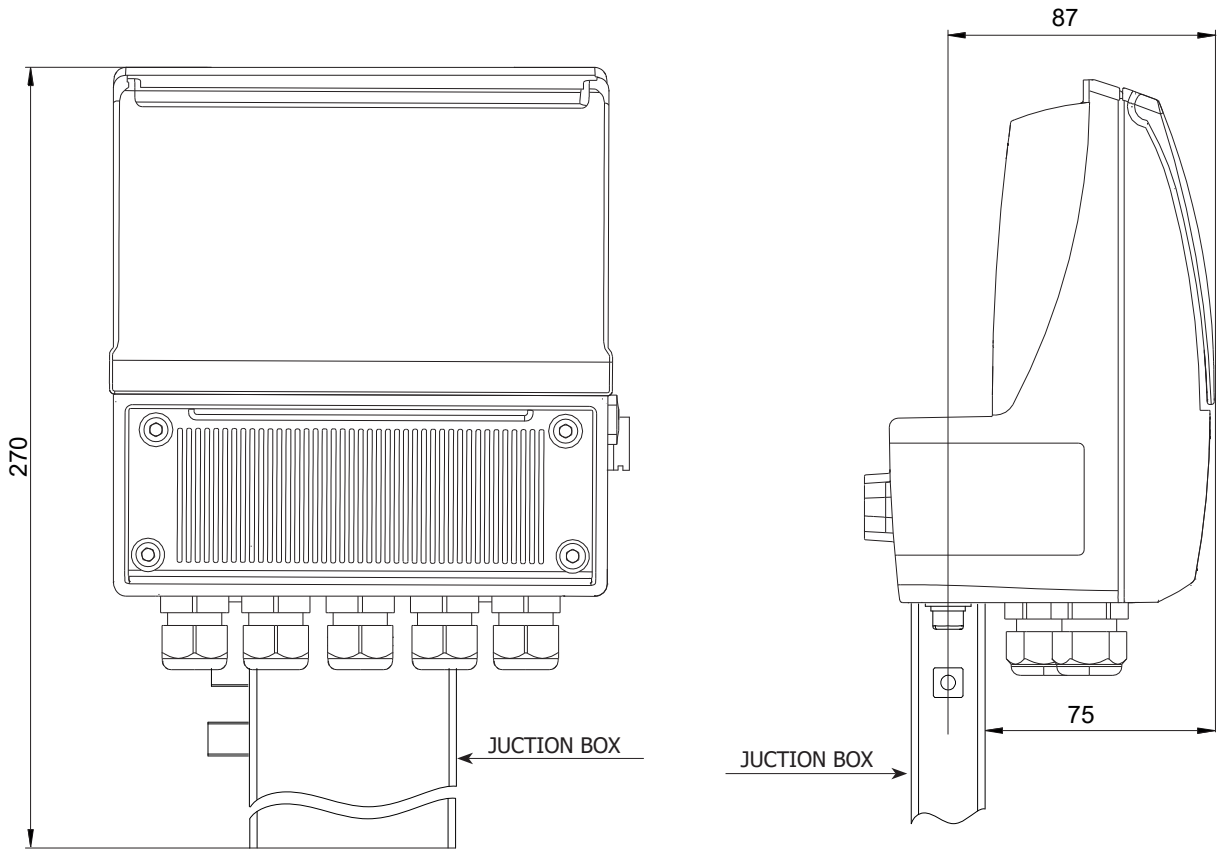

The manufacturer guarantees only English text available on our web site www.isoil.com

TORQUES

To guarantee the housing's IP degree the following torques are required:

HOUSING MATERIAL	**Housing screws (1)**	**Screws Terminal block cover (2)**	**Fixing Display Frame**	**PCB Screws**	**Version Cap (3)**	**Cable Glands (4)**	**Cap USB-B (5)**
ALUMINIUM HOUSING	6 Nm	5.5 Nm	3 Nm	0.8 Nm	8 Nm	4 Nm	4 Nm
PLASTIC HOUSING	2 Nm	2 Nm	2.5 Nm	0.8 Nm	7 Nm	4 Nm	4 Nm

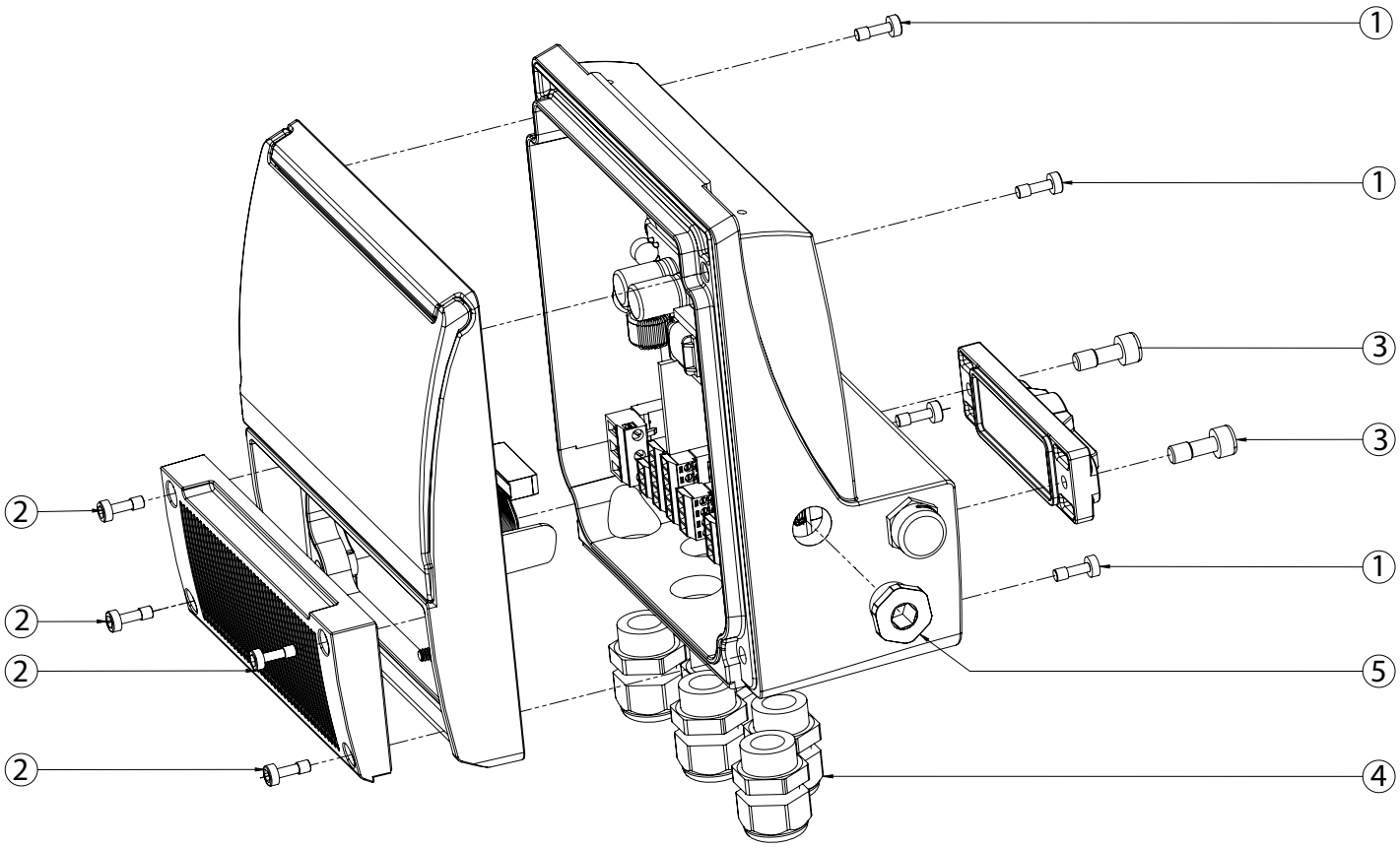

The manufacturer guarantees only English text available on our web site www.isoil.com

MV210 CONSTRUCTION

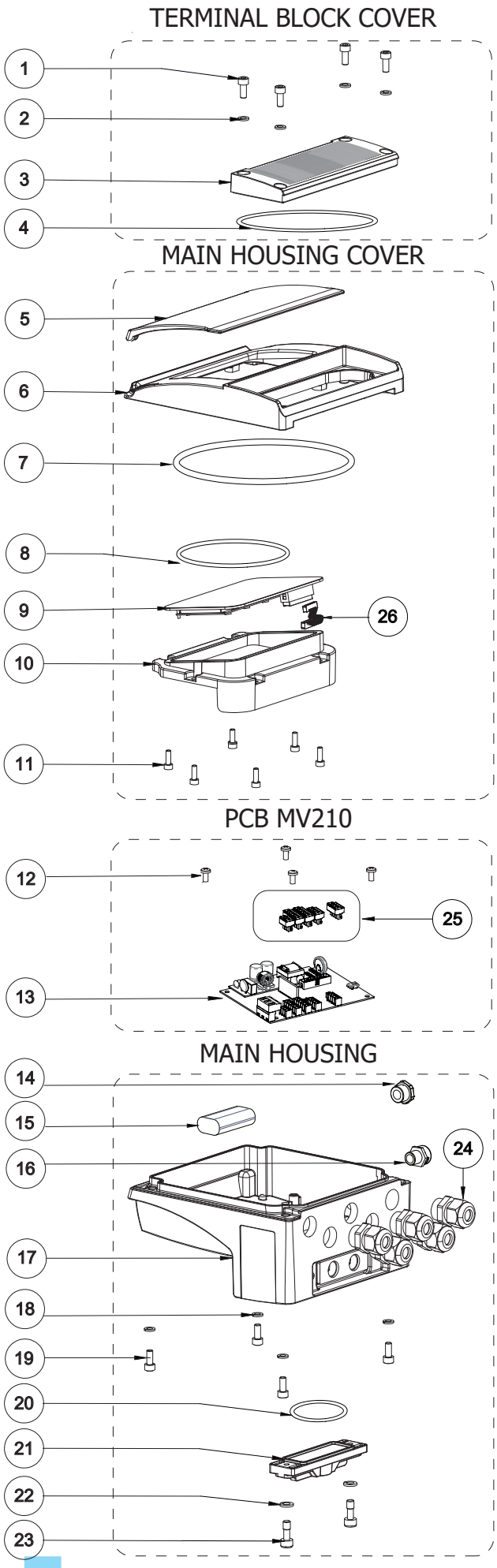

POS.	DESCRIPTION	
	PA6 VERSION	***ALUMINIUM VERSION***
1	SCREW M4x12	SCREW M5x12
2	GROWER Ø4	GROWER Ø5
3	TERMINAL BLOCK COVER	TERMINAL BLOCK COVER
4	O-RING-4400	
5	PROTECTION COVER	
6	HOUSING COVER	HOUSING COVER
7	ORING-4700	
8	ORING-117x3	
9	DISPLAY	
10	FIXING DISPLAY FRAME (MATERIAL PA06)	
11	SELF-TAPPING SCREW 4x10	TRILOBO SCREW 4x10
12	SELF-TAPPING SCREW 4x10	TRILOBO SCREW 4x10
13	PCB MV210	
14	PG9 CAP	
15	LITHIUM BATTERY	
16	ANTICONDESE CAP	
17	PA6 MAIN HOUSING	ALUMINIUM MAIN HOUSING
18	GROWER Ø4	GROWER Ø5
19	SCREW M4x12	SCREW M5x12
20	O-RING-155	
21	VERSION CAP (MATERIAL PA06)	
22	SCREW M6x16	
23	GROWER Ø6	
24	PG11 CABLE GLAND *CABLE DIAMETER:* Ø5-Ø10mm	
25	TERMINAL BLOCK *SOLID WIRE:* 26-16 AWG / 0.129-1.31 mm² *STRANDED WIRE:* 26-16 AWG / 0.129-1.31 mm² *TORQUE:* 3.0 Lb.In / 0.34 Nm	
26	FLAT CABLE	

The manufacturer guarantees only English text available on our web site www.isoil.com

INTERNAL LAYOUT

Internal Converter Views

Remove the main housing cover by removing the 4 screws as shown here below.

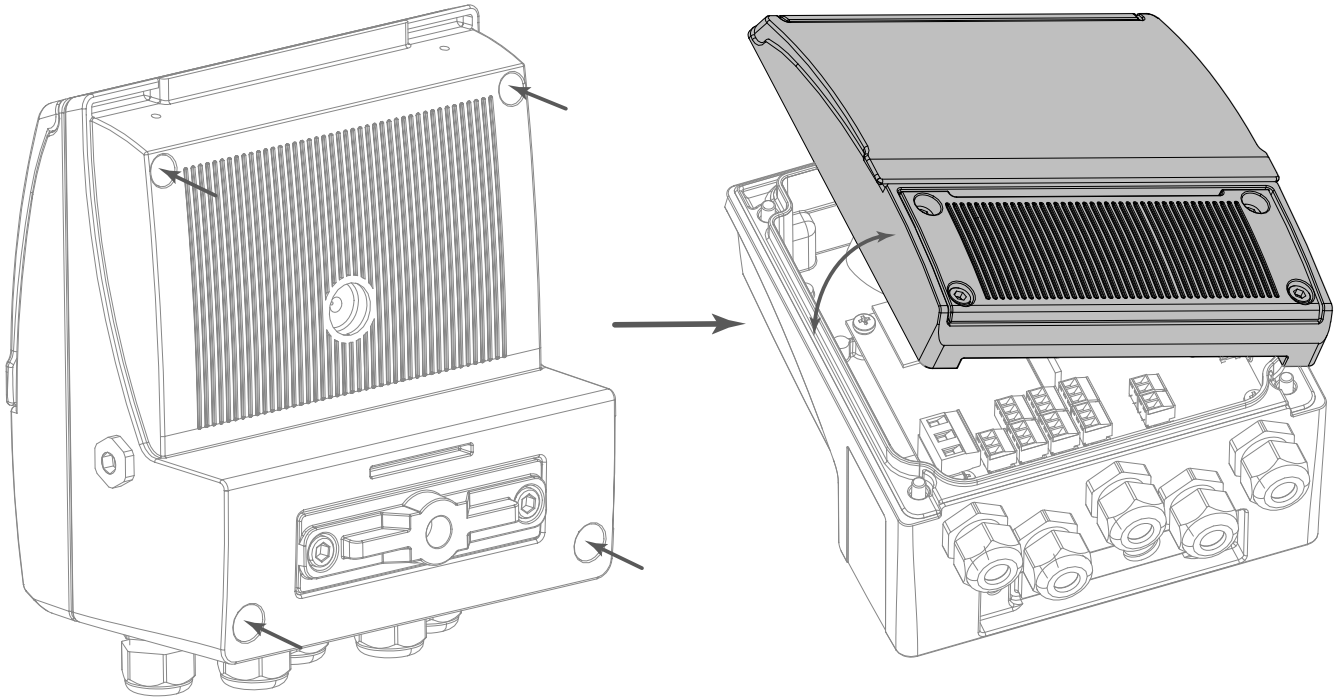

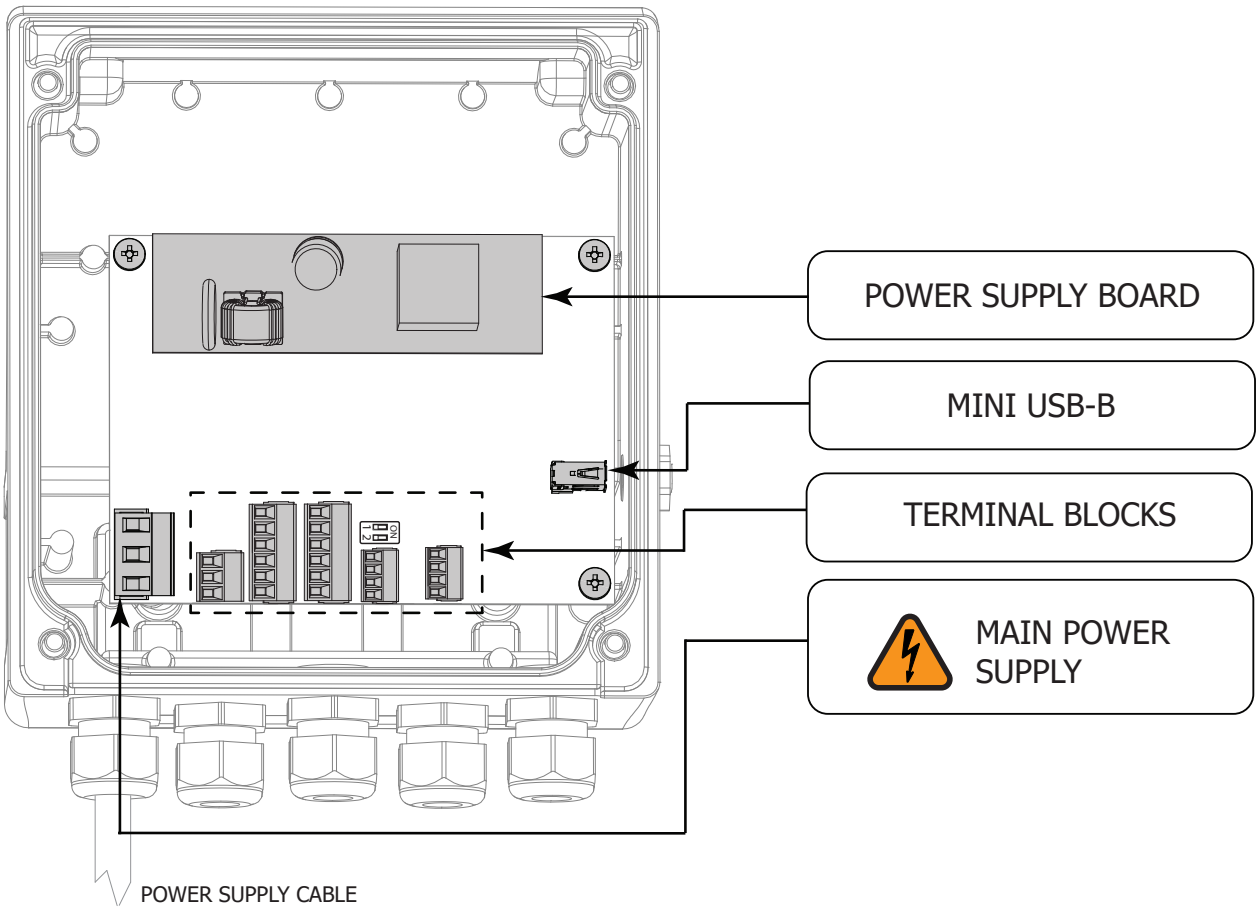

The manufacturer guarantees only English text available on our web site www.isoil.com

ELECTRICAL CONNECTION AND GROUNDING INSTRUCTIONS

Always ensure that the converter and the sensor are grounded (earthed) correctly. The grounding of the sensor and converter **must** ensure that the instrument and liquid are equipotential.

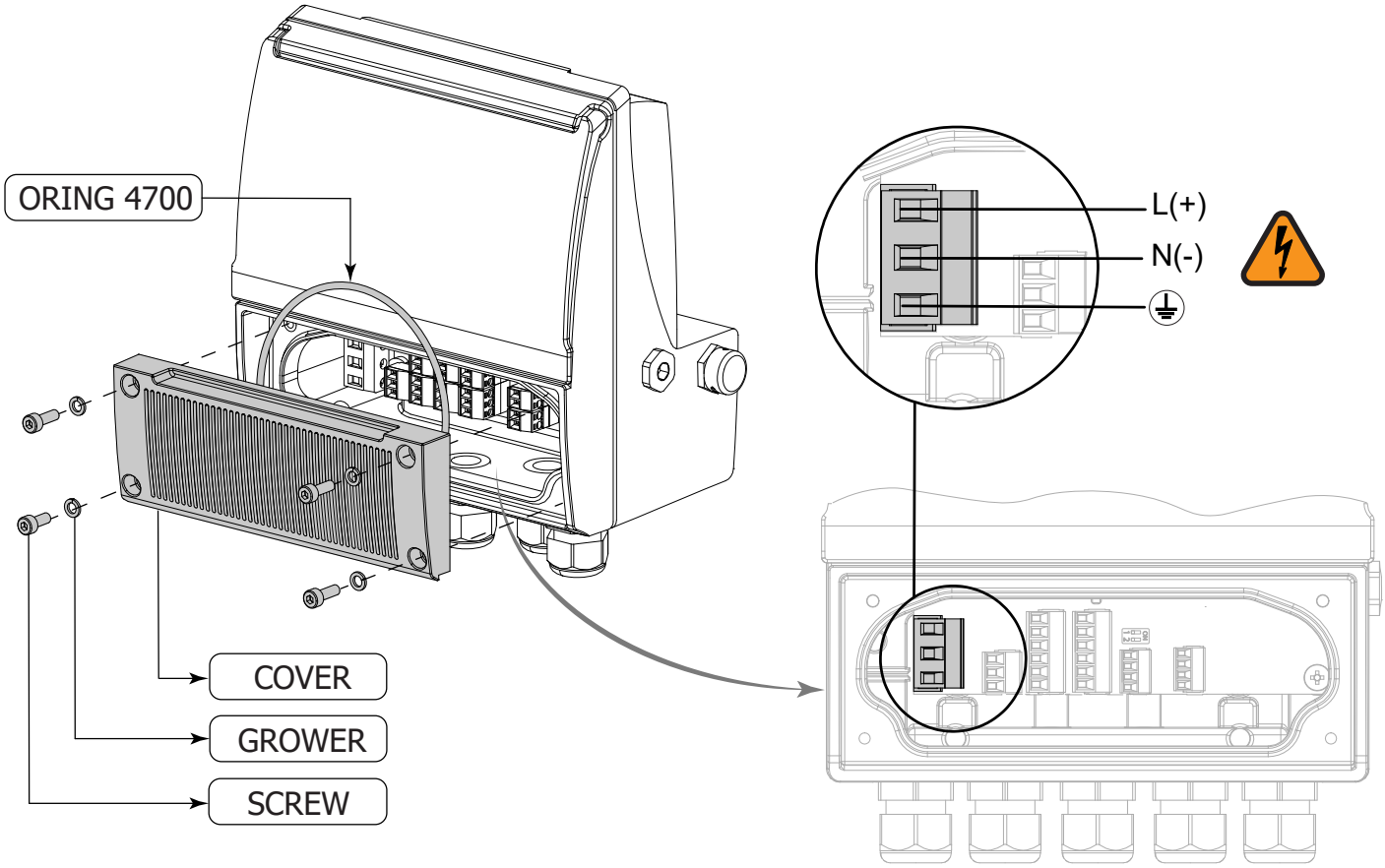

- ❑ Before connecting the power supply, verify that the mains voltage is within the limits indicated on data plate.
- ❑ For the connections use only approved conductors, with fire-proof properties, whose section varies from 0.25mm2 to 1.50mm2, based on distance/power; additionally fix the power supply wires with a additional fastening system located close to the terminal.
- ❑ The power supply line must be equipped with an external protection for overload current (fuse or automatic line breaker).
- ❑ Provide in close proximity the converter a circuit breaker easily accessible for the operator and clearly identified; whose symbols must conform to the electrical safety and local electrical requirements.
- ❑ Ensure that the component complies with the requirements of the standard for electrical safety distance.
- ❑ Check chemical compatibility of materials used in the connection security systems in order to minimize electrochemical corrosion. In the aluminum housing it should avoid direct contact between the ground connection cable and the aluminum housing. It is therefore recommended to connect the safety ground cable, by placing it between the washer and the metal bracket on the related terminal or use an eyelet terminal crimped on the ground protection cable.
- ❑ The sensor, hardwired inputs and outputs are connected to the converter through terminal blocks located inside the converter.
- ❑ To locate the terminal block loosen the 4 screws on the terminal block cover. When the front cover is lifted, the terminal block is visible. The terminal block is the hardwire connection of the converter to external equipment, including the sensor.

The following pages give informations on the terminal block numbering, and the respective connecting of the sensor cables, and inputs/outputs.

The manufacturer guarantees only English text available on our web site www.isoil.com

INTERNAL LITHIUM BATTERY

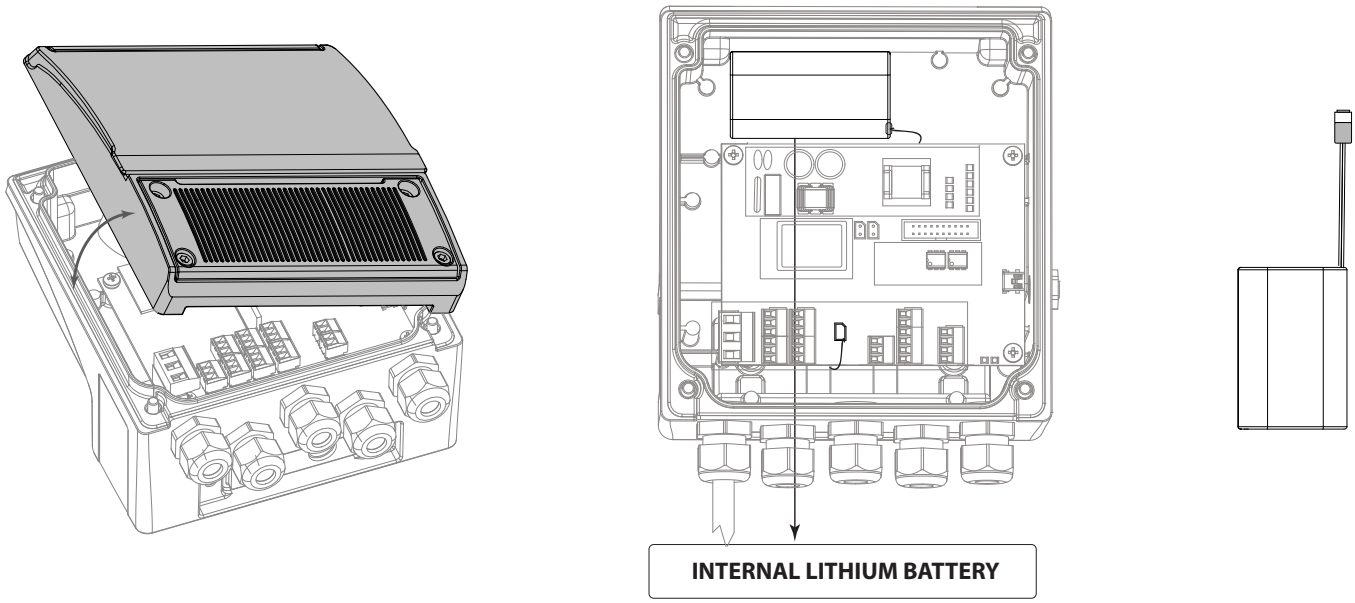

The manufacturer guarantees only English text available on our web site www.isoil.com

- ❑ The internal lithium battery is rechargeable and should never be disconnected from the converter card when it is powered by the mains voltage. If this operation should be carried out it could irreparably damage the converter board.
- ❑ The internal lithium battery is recharged only when the converter is connected to the mains supply (LV, LLV, HV), battery charging condition, and not with the USB connection.
- ❑ During charging, the battery symbol appears on the MCP display and flashes blue; see "MEANING OF FLAGS" page 21 (the colors of the symbols can only be viewed in the virtual display of the MCP interface)
- ❑ When the battery charge falls below the minimum potential, battery low, the fixed red battery symbol appears; see "MEANING OF FLAGS" page 21 (the symbol colors can only be displayed in the virtual display of the MCP interface). Furthermore, in this charging condition below the minimum potential, the measurement does not start when the USB cable is connected.
- ❑ The thresholds that identify the condition of Battery low and battery charging are established by the system according to the use and settings assigned and therefore there is no fixed value..
- ❑ The two Battery low and battery charging icons can both be present as each one indicates a different condition.

GENERAL OPERATING NOTES

- ❑ If the mains voltage is disconnected from the converter with HV power supply, the flashing blue icon indicating the charging status can remain active for tens of seconds. This is due to the energy stored in the HV power supply and in the capacities of the circuit that discharge slowly.
- ❑ The battery voltage during charging does not rise immediately but gradually. This is related to the parameters set in the converter and detected by the controller chip.
- ❑ When the battery is physically disconnected the potential measured by the system is not true because the charging circuit checks the battery status by emitting impulses. These load the capacities in the circuit and the average value detected is not to be considered a reliable real value.
- ❑ The MCP command [SBCHS] indicates the percentage of charge and is not linear with respect to the battery voltage, however approximately it reads 0% with a voltage equal to about 3.2 V, while 100% occurs with about 4.1 V. These values are influenced by the temperature and the total operating time that worked the battery.

ELECTRICAL CONNECTION CONVERTER- SENSOR

Sudden movements of the electrodes cable could introduce noise.

SH = SHIELD OF CABLE internally connected to ground.

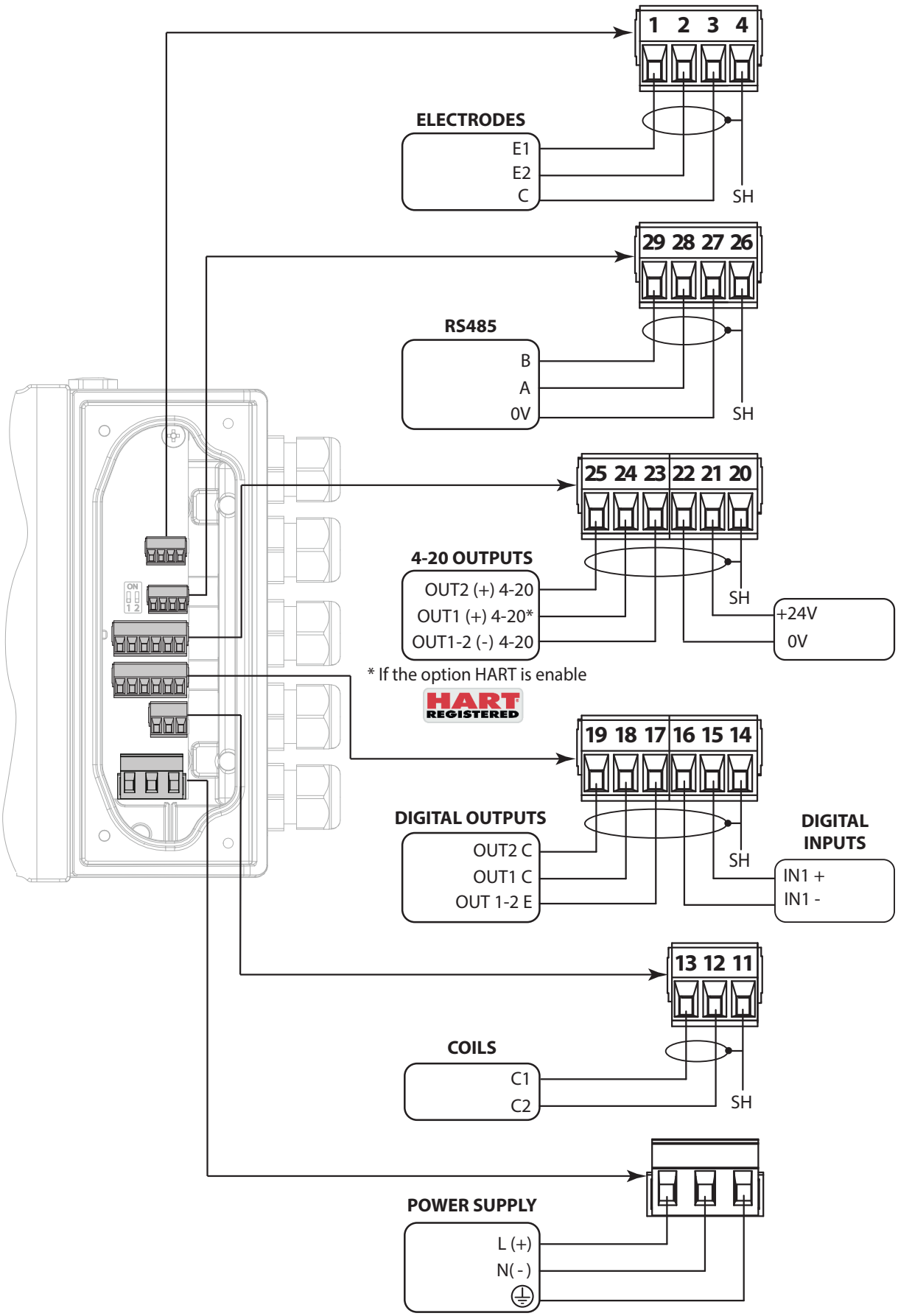

The manufacturer guarantees only English text available on our web site www.isoil.com

DIGITAL INPUT ON/OFF OPERATION

EXTERNAL POWER SUPPLY

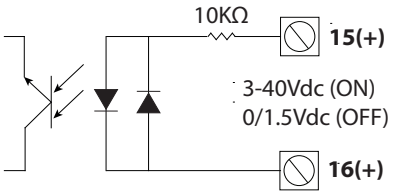

INTERNAL POWER SUPPLY

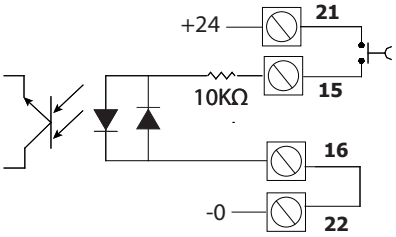

RESET TOTALIZERS

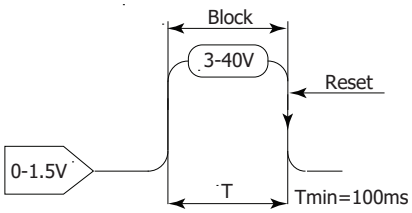

Necessary conditions for enabling the function

- ❑ POS. 6.1 see page 28 (T+; total direct positive set on)
- ❑ POS. 6.2 see page 28 (P+; partial direct positive set on)
- ❑ POS. 6.3 see page 28 (T-; total direct negative set on)
- ❑ POS. 6.4 see page 28 (P-; total direct negative set on)

BLOCK TOTALIZERS

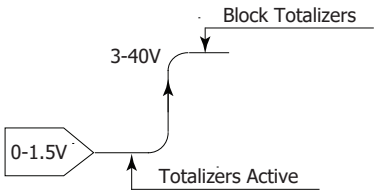

Necessary conditions for enabling the function

- ❑ POS. 6.5 see page 28 (Totalizer counting lock command set on)

RANGE CHANGE

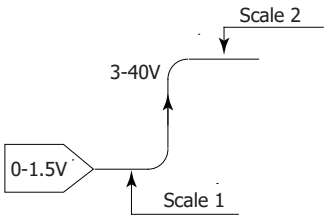

Necessary conditions for enabling the function

- ❑ POS. 6.8 see page 28 (Range change set on)

MEASURE LOCK

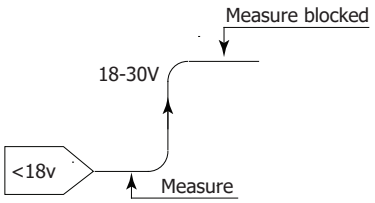

Necessary conditions for enabling the function

- ❑ POS. 6.6 see page 28 (Totalizer counting lock command set on)

BATCHING

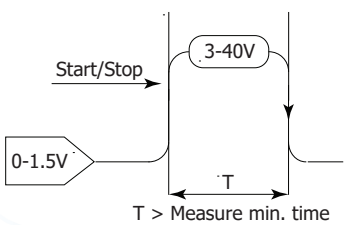

Necessary conditions for enabling the function

- ❑ 7.1 Output 1 functions, Set to BATCHING

MUST BE
T > Tmin

MEASURE FREQ.	T MIN
50HZ	20ms
10HZ	100ms
5HZ	200ms
2HZ	500ms

The manufacturer guarantees only English text available on our web site www.isoil.com

OUTPUTS WIRING

DIGITAL OUTPUTS

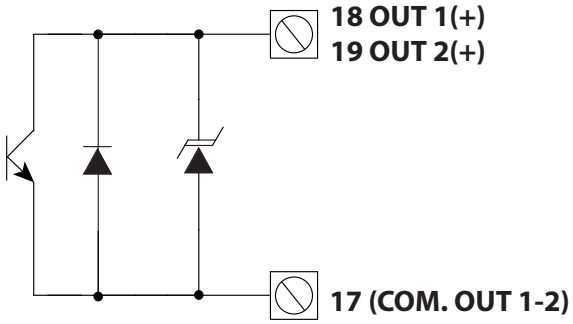

- Opto-insulated output with floating collector and emitter terminals freely connectable
- Maximum switching voltage: 40V ⎓
- Maximum switching current: 150mA
- Maximum saturation voltage between collector and emitter @150mA: 1.2V
- Maximum switching frequency (load on the collector or emitter, RL=470, VOUT=24V ⎓): 1250Hz
- Maximum reverse current bearable on the input during and accidental polarity reversion (VEC): 100mA
- Insulation from other secondary circuits: 500V ⎓

ANALOG OUTPUTS

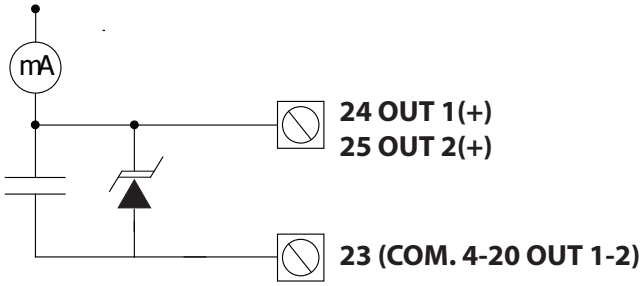

- Opto-insulated output
- Maximum load: 1000Ω
- Maximum voltage without load: 27V
- Refresh frequency is the same of the sample frequency of the connected sensor
- Protected against persistent over voltages to maximum 30V

The manufacturer guarantees only English text available on our web site www.isoil.com

RS485 MODBUS MODULE (OPTIONAL)

Positioning to 'ON' the termination switches 1 and 2, a 120Ω résistance is activated in the RS458 circuit (see terminal block).

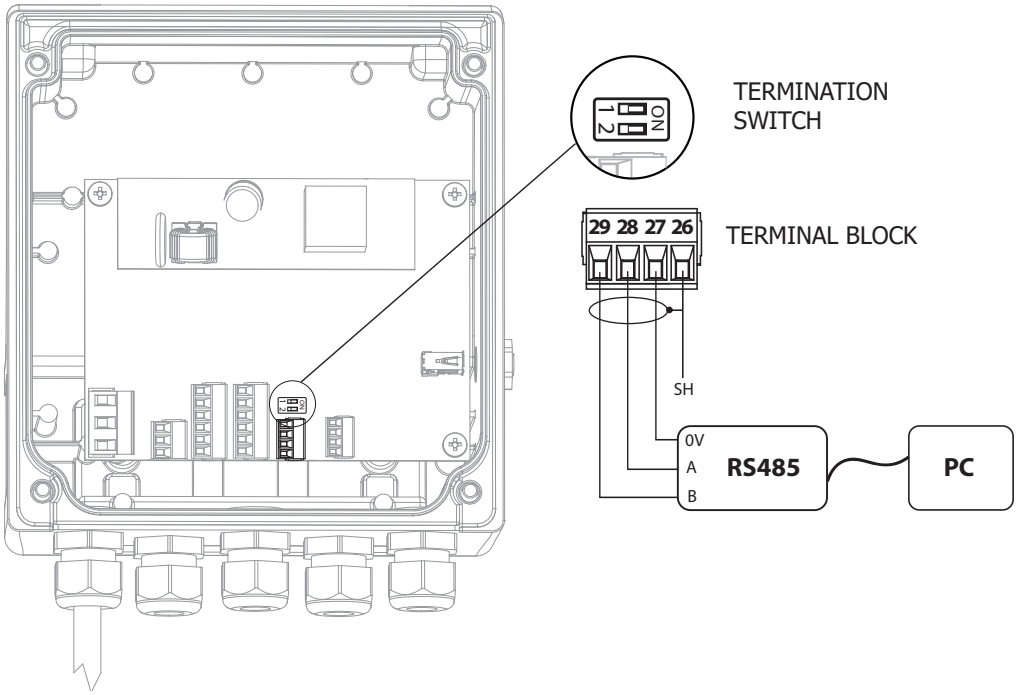

The manufacturer guarantees only English text available on our web site www.isoil.com

CONNECTORS MIL

THE following are the links of the MIL connectors IP68

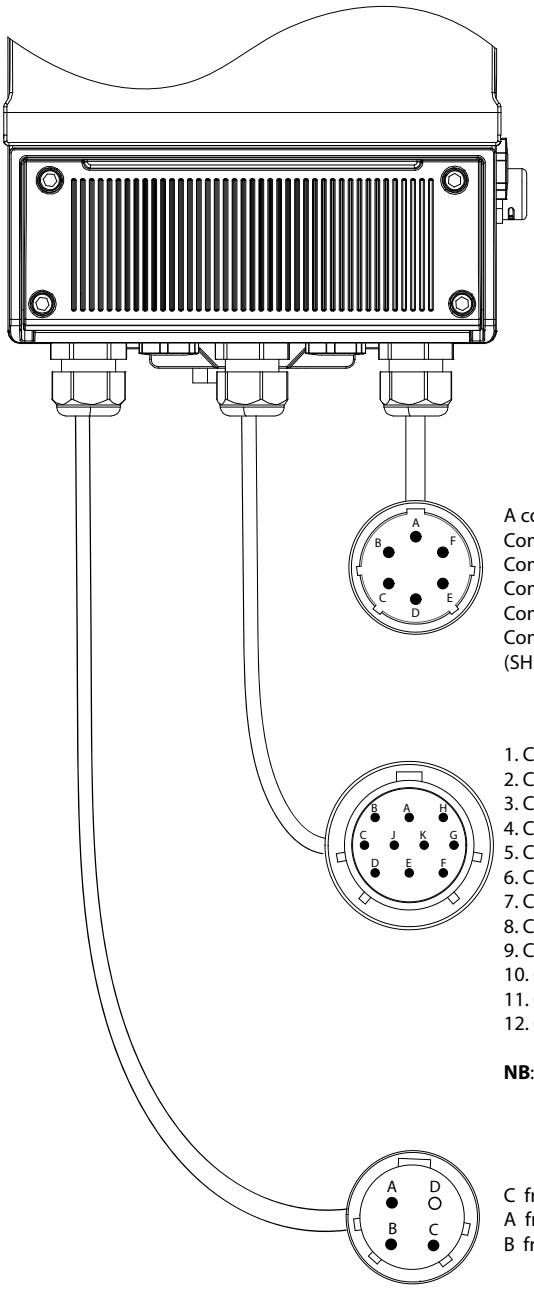

SENSOR SIGNALS

A contact from terminal 1 of the converter (electrode 1)
Contact F from terminal 2 of the converter (electrode 2)
Contact And from terminal 3 of the converter (COM. Elec.)
Contact B from terminal 13 of the converter (COIL 1)
Contact C from terminal 12 of the converter (COIL 2)
Contact D from terminal 4 and 11 of converter
(SHIELD electrodes - COILS)

Connector
6 poles

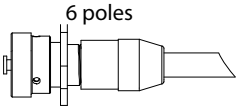

INPUT/OUTPUT

1. Contact B from terminal 24 of the converter (Out1 4-20 +)
2. Contact A from terminal 25 of the converter (Out2 4-20 +)
3. Contact H from terminal 23 of the converter (Out1-2 4-20 -)
4. Contact C from terminal 21 of the converter (+ 24V)
5. Contact J from terminal 22 of the converter (0V)
6. Contact K from terminal 15 of the inverter (IN1 +)
7. Contact G from terminal 16 of the converter (IN1-)
8. Contact D from terminal 19 of the converter (C Out2)
9. Contact E from terminal 18 of the converter (Out1 C)
10. Contact F from terminal 17 of the converter (Out1-2 E)
11. Contact C from terminal 28 of the converter (RS485 A)
12. Contact J from terminal 29 of the converter (RS485 B)

NB: the connections 4 and 5 exclude the use connections 11 and 12.

Connector
10 poles

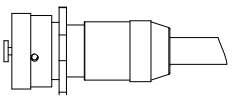

POWER SUPPLY

C from terminal L power converter (+ dc)
A from terminal N power converter (-dc)
B from terminal GROUND Power Converter

Connector
4 poles

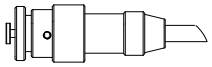

NOTE: Military Connector 6 poles for sensor converter only provided in the separate version of the converter.

The manufacturer guarantees only English text available on our web site www.isoil.com

START VISUALIZATION PAGES

The direct exposure of the converter to the solar rays, could damage the liquid crystal display.
The visualization pages can be change according to instrument's setup.

Push to change visualization

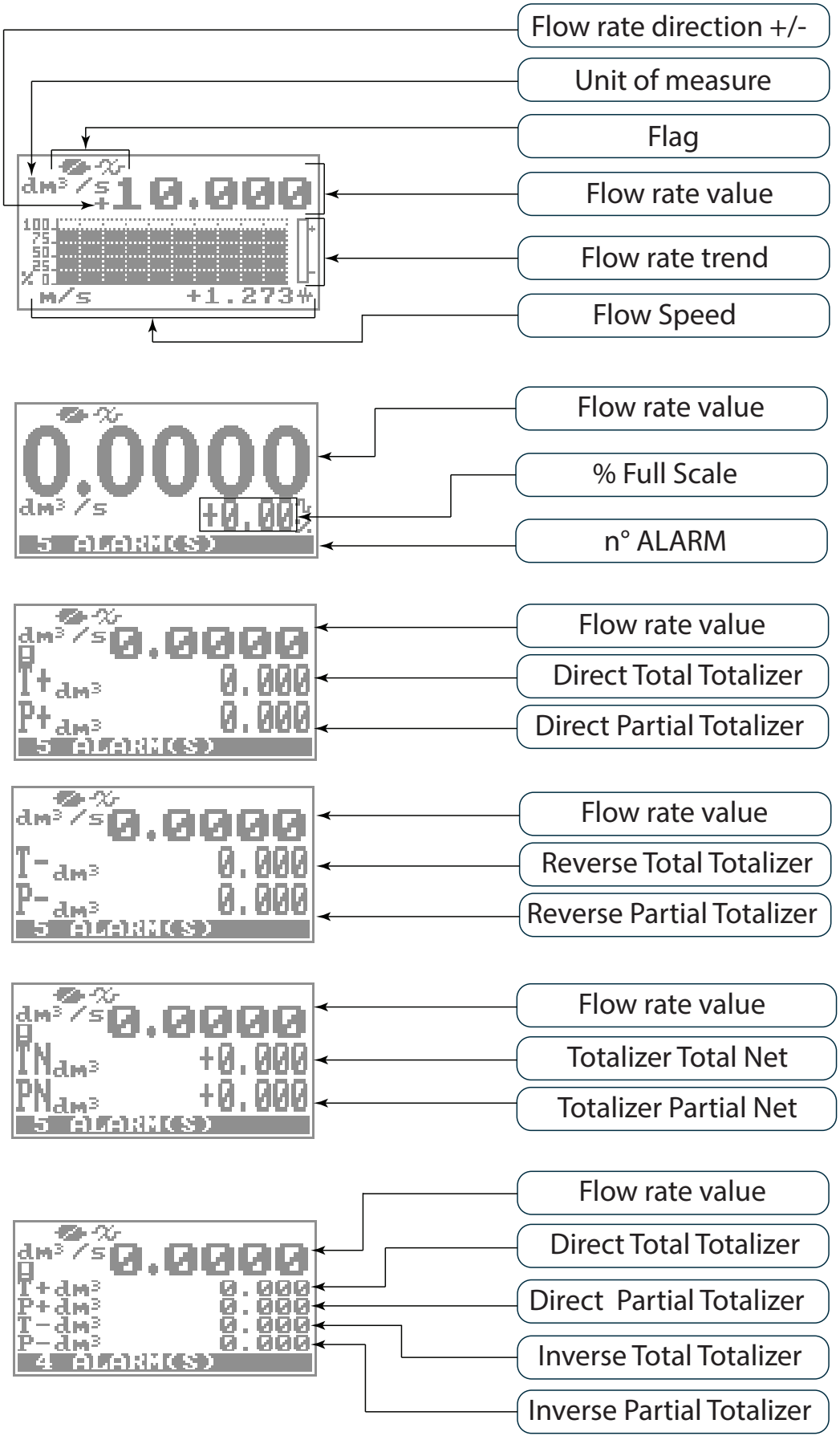

The manufacturer guarantees only English text available on our web site www.isoil.com

Push to change visualization

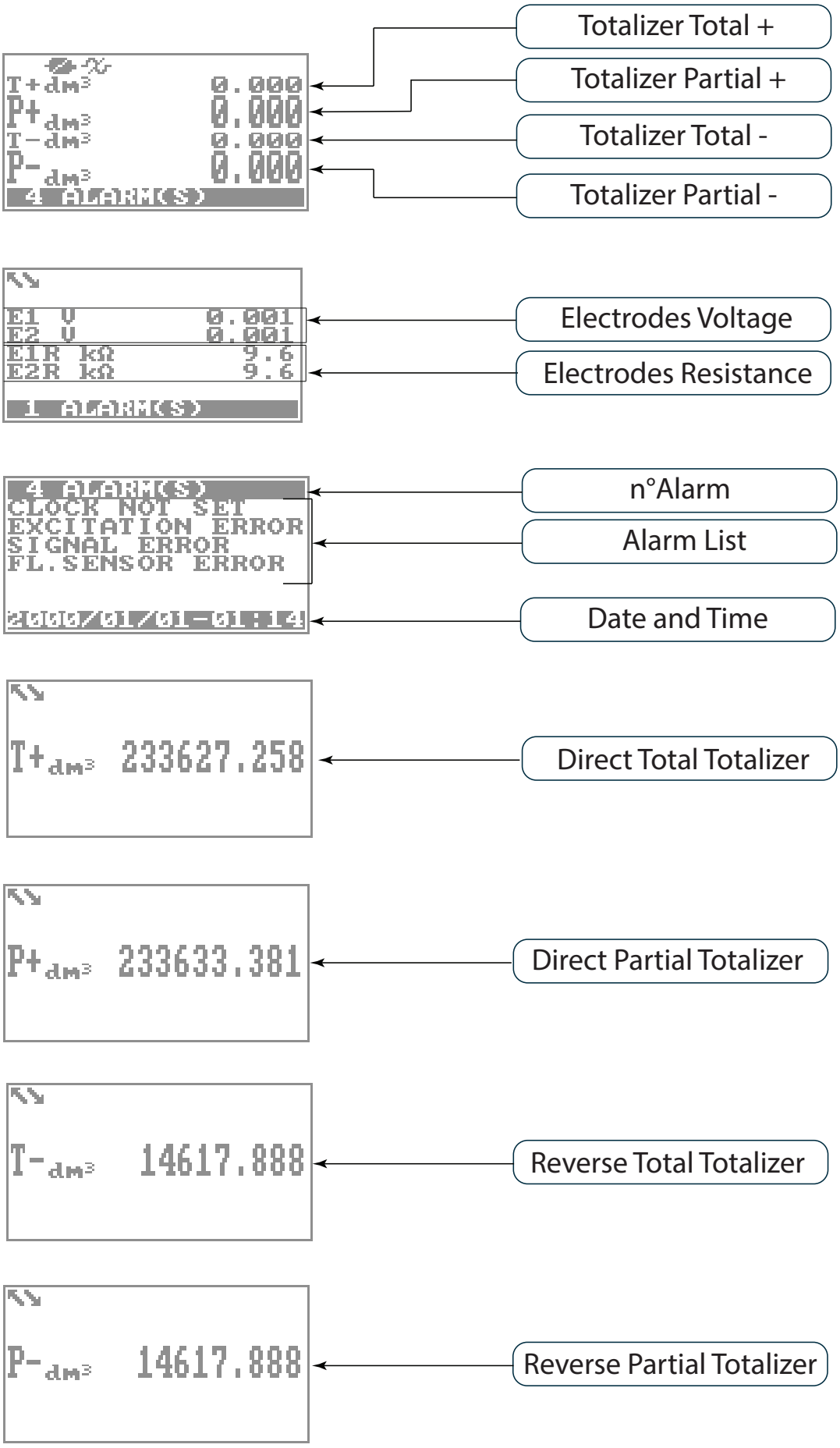

The visualitation page about batching is described in the dedicated section "BATCHING" pag45

The manufacturer guarantees only English text available on our web site www.isoil.com

MEANING OF FLAGS

FLAG	DESCRIPTION	FLAG	DESCRIPTION
	EMPTY PIPE		MIN FLOW ALARM
	FILE UPLOAD		MAX FLOW ALARM
	FILE DOWNLOAD		VIDEO TERMINAL CONNECTED
	BATTERY RECHARGE (FLASHING) LOW BATTERY (FIXED)		FLOW RATE OVERFLOW
	FLOW RATE SIMULATION (FLASHING)	1	PULSE 1 OVERFLOW
	CALIBRATION (FLASHING)	2	PULSE 2 OVERFLOW
	GENERIC ALARM (FLASHING)		POWERED DEVICE WITH ONE CHARGERS BATTERY (MID-DIRECTIVE) oppure BATCHING IN PROGRESS
	GENERAL ALARM ONLY ON PHYSICAL DISPLAY (FLASHING)		
	SIGNAL ERROR		
	EXCITATION ERROR		

The manufacturer guarantees only English text available on our web site www.isoil.com

MEANING OF LED COLORS

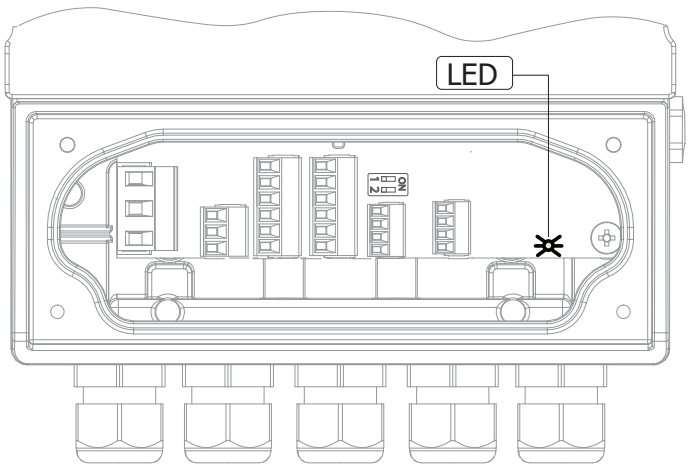

LED Red: Alarm signal
LED Blue: Usb communication enable
LED Green: Functioning system correctly

ACCESS TO THE CONFIGURATION MENU

The configuration can be done in two different ways:

- ❑ By keypad of converter
- ❑ By MCP interface (Virtual display of instrument)

Access Via Keypad

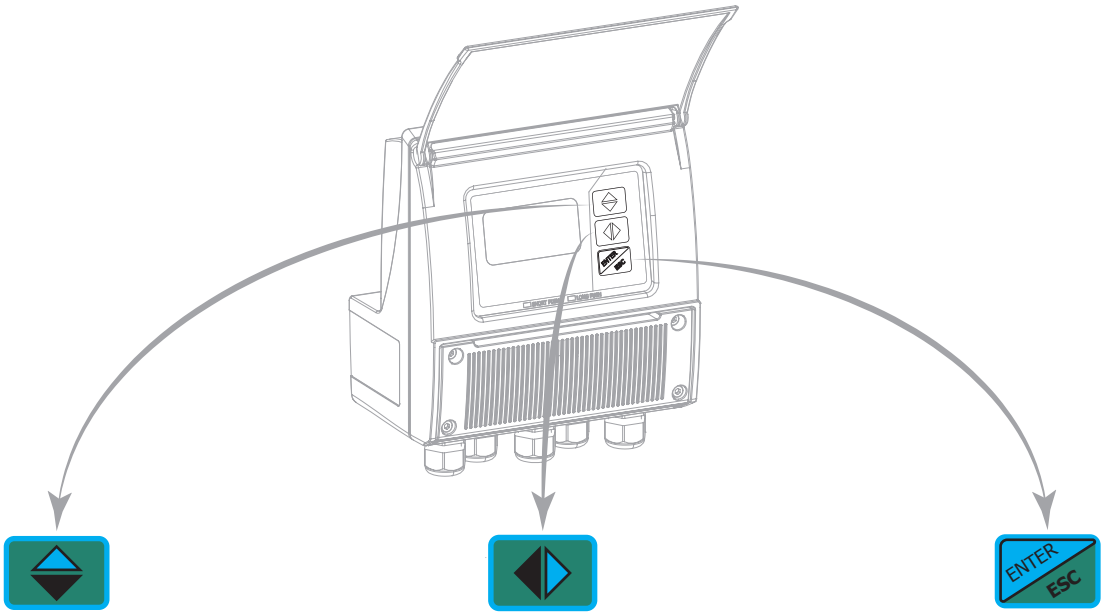

SHORT PRESSING (< 1 SECOND):
Increases the numeric figure or the parameter selected by the cursor
Returns to the previous subject on the menu.
LONG PRESSING (> 1 SECOND):
Decreases the numeric figure or the parameter selected by the cursor. Proceeds to the next subject on the menu.

SHORT PRESSING (< 1 SECOND):
Moves/positions the cursor rightward on the input field. Proceeds to the following subject of the menu. Change the display of the process data
LONG PRESSING (> 1 SECOND):
Moves/positions the cursor leftward on the input field. Returns to the previous subject on the menu

SHORT PRESSING (< 1 SECOND):
Enter /leave the selected function
Enables the main menu for the instrument configuration Cancels the selected function under progress
LONG PRESSING (> 1 SECOND):
Leaves the current menu
Enables the totalizer reset request (when enabled) Confirms the selected function.

Access Via Mcp interface (Virtual Display)

MCP is a Windows® software that allows to set all the converter functions and personalize the menu. The MCP program is required for the blind version of the converter. To use MCP interface consult the relevant user manual.

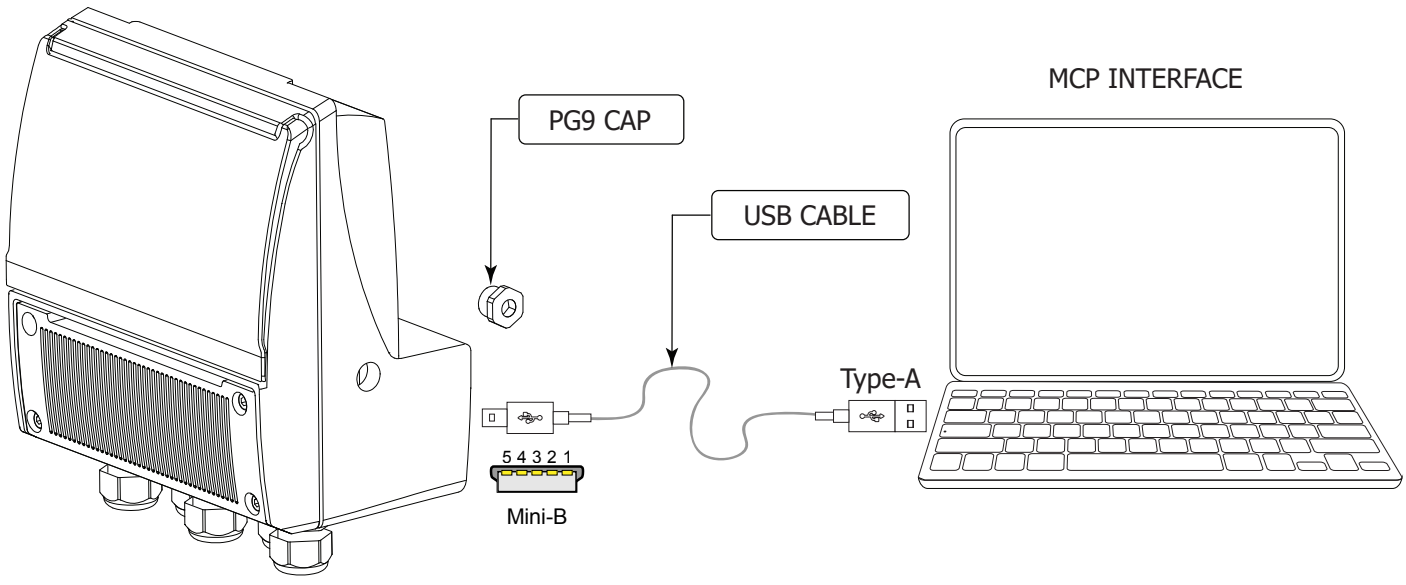

The manufacturer guarantees only English text available on our web site www.isoil.com

FLOW RATE VISUALIZATION

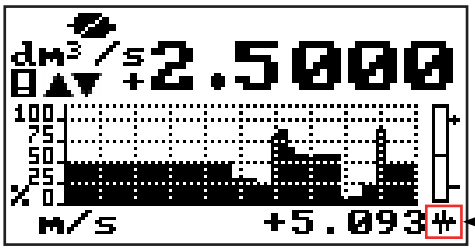

This symbol appears (red color on the virtual display) only when the overall noise is over 2.5% of flow rate.

The MV 210 can show a 5 digits display for flow rate units; this mean the maximum flow rate value that can be represented on the display is 99999 (no matter the positioning of the decimal point). The minimum is 0.0025. The representable measure unit depends on sensor flow rate and diameter; the permitted units are those, that permits the instrument full scale value not exceeding 99999.
Example for DN 300, Full scale value: 3m/s:

- ❑ **PERMITTED measure unit** (example): l/s (216.00); m3/h (777.60); m3/s (0.2160)
- ❑ **NOT PERMITTED measure unit** (example): l/h (777600)

FLOW RATE ALERT

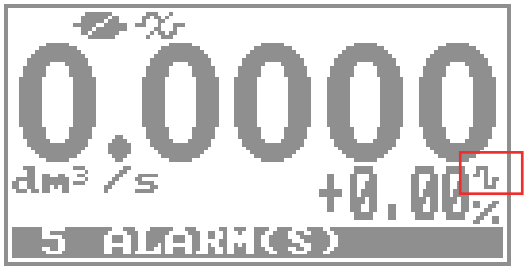

This FLAG becomes active when there is a flow variation (flow rate not stable).

QUICK START MENU

The QUICK START MENU allows to user immediate access to some of the most commonly used functions; through MCP software it possible customize this menu to make it suitable for the specific application.

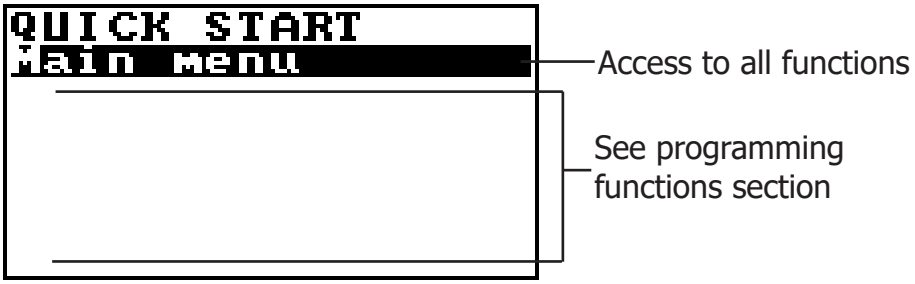

The user has immediate access to the Quick Start menu when the converter is powered up by pressing the Enter key. If access to the quick start menu does not occur, then it could be disabled using the function "9.11" page 29 .

The manufacturer guarantees only English text available on our web site www.isoil.com

CONVERTER ACCESS CODE

The access for programming the instrument is regulated by six access levels logically grouped.
Every level is protected by a different code.

- *Access Level 1-2-3-4 Freely programmable by user*

Access Code Set : Menu 13 System

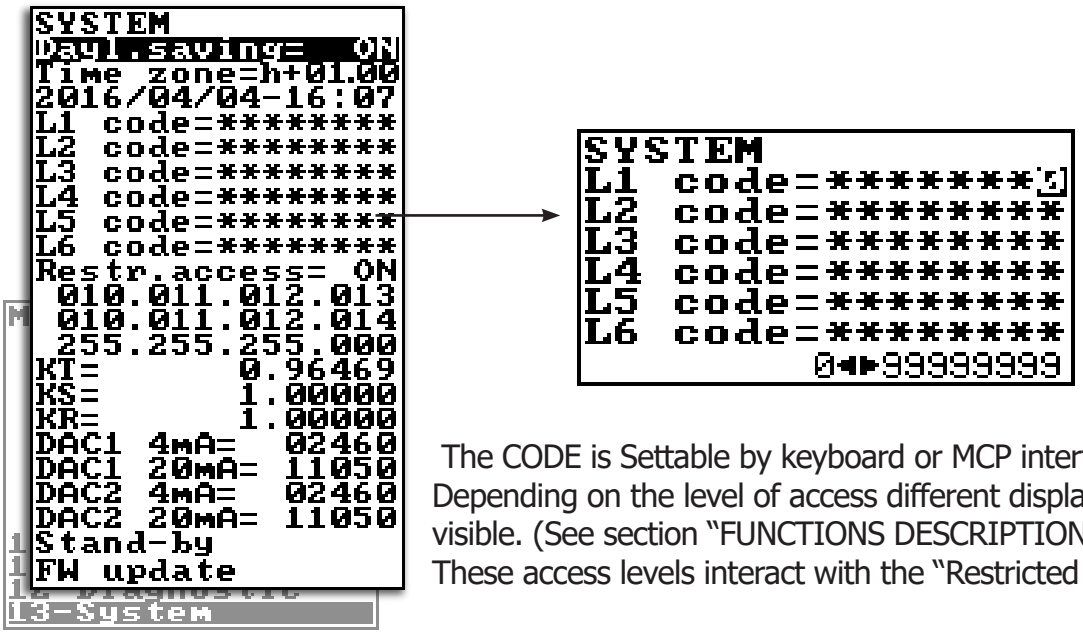

The CODE is Settable by keyboard or MCP interface.
Depending on the level of access different display functions will be visible. (See section "FUNCTIONS DESCRIPTION" page 32)
These access levels interact with the "Restricted access"

Restricted Access Set : Menu 13 System

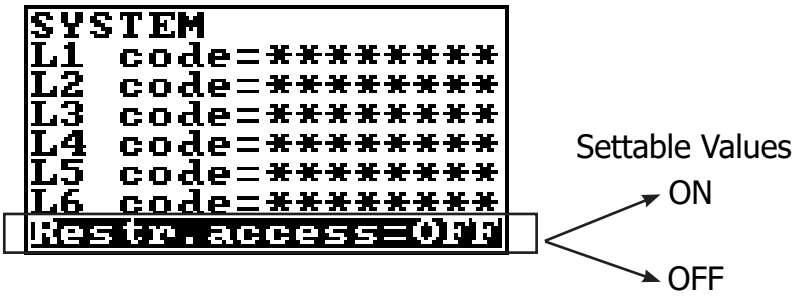

Restrict = ON: Access permitted only to functions provided for a specific level;
Example: If the operator has a code of access level 3, after having set it, he can change only the functions with level 3 access.

Restict = OFF: It enables to change functions for the selected level and ALL the functions with lower access level.
Example: If the operator has the code of level 3, after having set it, he can change all the functions at level 3 and those at lower levels.

* WARNING: take careful note of the customized code, since there is no way for the user to retrieve or reset it if lost.

Factory preset access codes:

- **L1: 10000000**
- **L2: 20000000**
- **L3: 30000000**
- **L4: 40000000**

The manufacturer guarantees only English text available on our web site www.isoil.com

The following example shows how to change the Full scale by Quick Start menu; the second illustrates how to change the function by the Main menu.

EXAMPLE: modifying the full scale value from 4dm³/s to 5dm³/s, from the "Quick start menu"

1

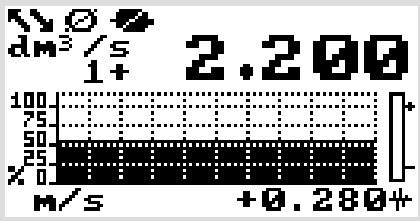

Press the ENTER button to access the Quick Start menu

2

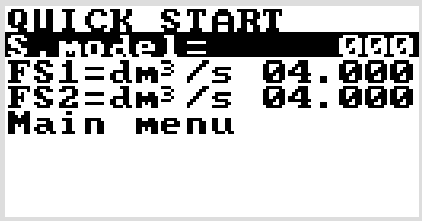

Select this function in the list to be edited

3

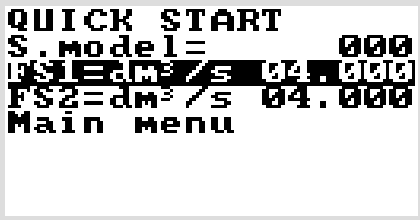

Press the ENTER button to select the function.

4

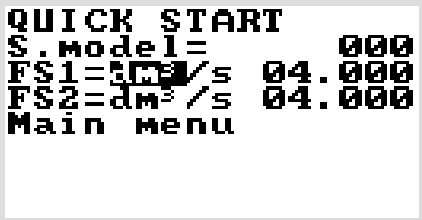

Select the value to be changed

5

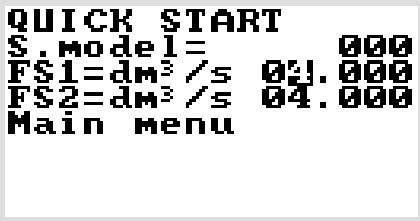

Change the value

6

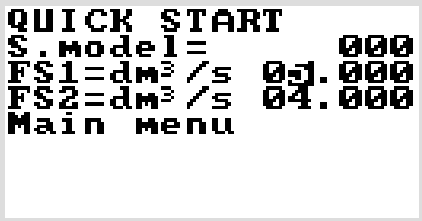

Confirm the new value

7

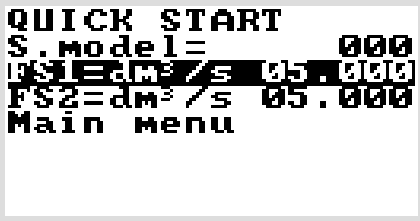

Long Push

8

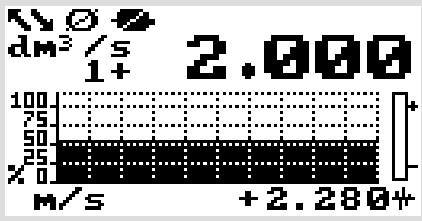

Main Page

The manufacturer guarantees only English text available on our web site www.isoil.com

EXAMPLE: modifying the full scale value from 4dm³/s to 5dm³/s, from the "Main Menu" (quick start menu enabled)

1

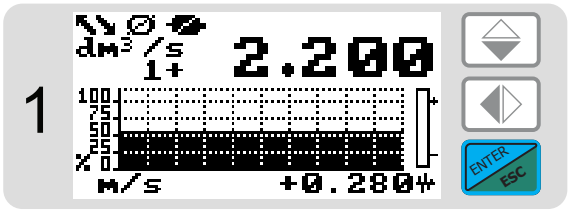

Press the ENTER button to access the Quick Start menu

2

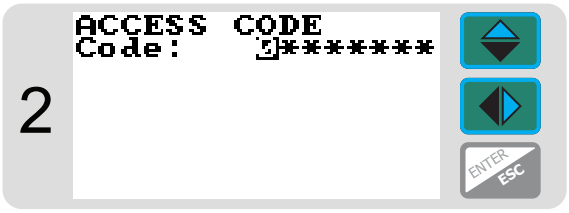

Press arrow keys to select the cell in which to insert the number of the access code.

3

Press ENTER button to confirm value.

4

Select "Main Menu"

5

Press the ENTER button to access the Main Menu

6

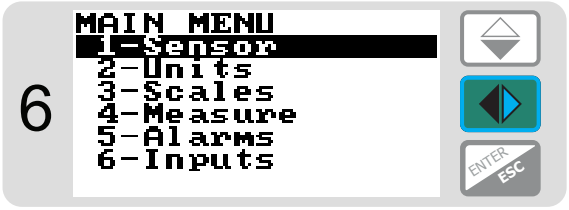

Select function

7

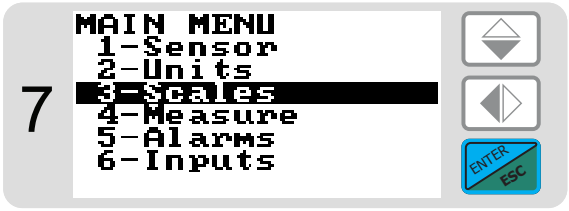

Press the ENTER button to access the"Scale Menu"

8

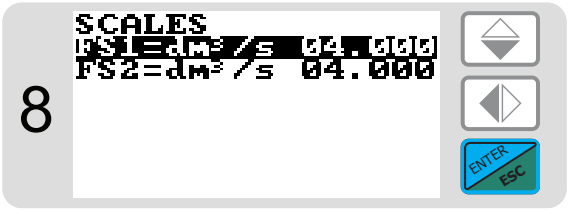

Press the ENTER button to access the "Fs1"

9

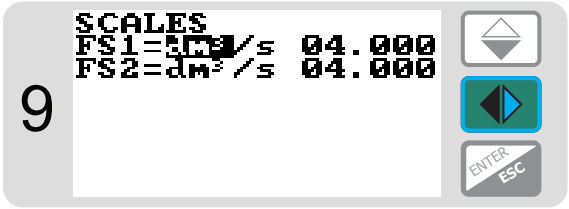

Select the value to be changed

10

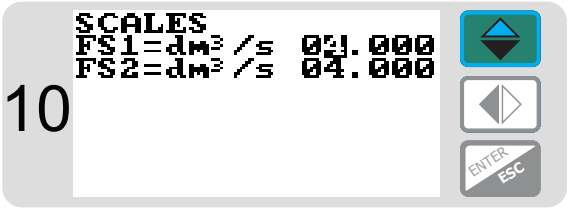

Change the value

11

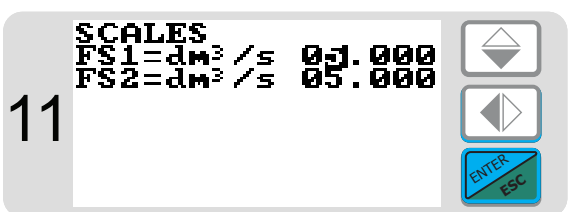

Press the ENTER button Confirm the new value

12

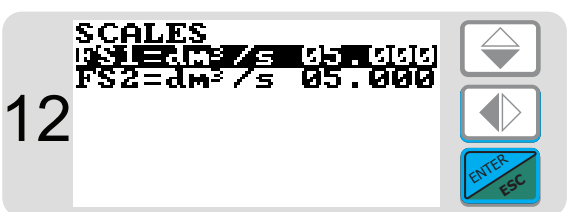

Press Esc

13

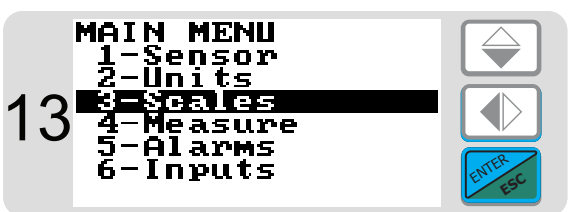

Press Esc

14

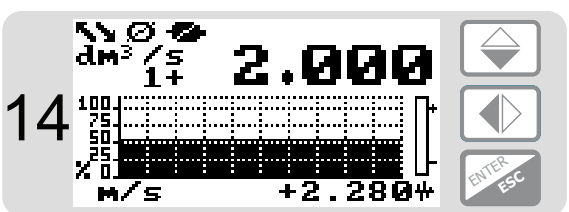

Main page

The manufacturer guarantees only English text available on our web site www.isoil.com

FUNCTIONS MENU

The main menu is selected from the Quick start menu by pressing the ENTER/ESC key and entering the access code; enter the access code if required. Note: Some functions are displayed only with other functions active, or with optional modules.

SENSOR

```
MAIN MENU
 1-Sensor
 2-
 3-
 4-
 5-
 6-
 7-
 8-
 9-
10-
11-
12-
13-
```

```
SENSOR
S. model =                 0
Lining =               UNSPEC.
S. type =              FULLBORE
u.type=                METRIC
Diam                mm 00025.0
KA =                +00.9637
KA- =               -04.4904
KZ =                +0000000
KD=                 +0000000
Ins. position=             0
KP DinaWmic=             OFF
Ki=                    01.8727
Kp=                    01.0000
KC=                    1.00000
C.curr =                 025.0
C.Reg.PB=                004
C.Reg.DK=                008
S. Freq.= Hz              50
Preamplif.               OFF
E.P Detect=               ON
R max= kohm              0500
El. Cleaning=            OFF
S. cable=              m 000
S. err. delay=           010
Sens. verify=            OFF
Zero point cal.
KL                 00.00000000
```

1.1	Sensors model: Enter the first two characters of the serial number of the sensor
1.2	Flow sensor lining material type
1.3	Type of sensor: fullbore or insertion
1.4	Type of measure units for sensor parameter: metric or imperial
1.5	Insert ND of sensor (0-2500)
1.6	Calibration data of sensor visualized on sensor's label
1.7	Calibration data of sensor for negative flow
1.8	Sensor coefficient KZ (zero point)
1.9	Sensor coefficient KD
1.10	Insertion position
1.11	KP dynamic, coefficient for insertion
1.12	Sensor coefficient Ki
1.13	Sensor coefficient Kp
1.14	Sensor coefficient KC
1.15	CW volume total. decimal point position
1.16	Current regulator proportional band
1.17	Current regulator derivation constant
1.18	Measure sampling frequency
1.19	Enables the preamplifier
1.20	Enables the empty pipe detection feature
1.21	Empty pipe detection threshold
1.22	Electrode cleaning
1.23	Sensor connecting cable length
1.24	Signal error delay (n. sample)
1.25	Automatic sensor verify enable
1.26	Pipe hydraulic zero calibration
1.27	Linearization coefficient

UNITS

```
MAIN MENU
 1-Sensor
 2-Units
 3-Scales
 4-
 5-
 6-
 7-
 8-
 9-
10-
11-
12-
13-
```

```
UNITS
Diam.                     mm
S.cable                    m
FR.unit                METRIC
PI1 unit               METRIC
PI2 unit               METRIC
T+ unit                METRIC
T+ unit                    g
T+ D.P                     3
P+ unit                METRIC
P+ unit                    g
P+ D.P                     3
T- unit                METRIC
T- unit                    g
T- D.P                     3
P- unit                METRIC
P- unit                    g
P- D.P                     3
Temp.unit                 °C
Mass units                ON
Sg=kg/dm3             1.0000
```

2.1	Nominal diameter measure unit
2.2	Cable length on separate version
2.3	Flowrate type measure unit: metric or not metric
2.4	Pulse 1 type measure unit: metric or not metric
2.5	Pulse 2 type measure unit: metric or not metric
2.6	Total direct totalizer measure unit type: metric or not metric
2.7	Total direct totalizer measure unit
2.8	Total direct totalizer decimal point position
2.9	Partial direct totalizer measure unit type: metric or not metric
2.10	Partial direct totalizer measure unit
2.11	Partial direct totalizer decimal point position
2.12	Total reverse totalizer measure unit type: metric or not metric
2.13	Total reverse totalizer measure unit
2.14	Total reverse totalizer decimal point position
2.15	Partial reverse totalizer measure unit type: metric or not metric
2.16	Partial reverse totalizer measure unit
2.17	Partial reverse totalizer decimal point position
2.18	Temperature measure unit
2.19	Enable/disable the selection of mass units on full scale set
2.20	Specific gravity coefficient

The manufacturer guarantees only English text available on our web site www.isoil.com

SCALES

```
MAIN MENU
 1-Sensor
 2-Units
 3-Scales
 4-Measure
 5-
 6-
 7-
 8-
 9-
10-
11-
12-
13-
```

SCALES

FS1 g/s	4908.7	3.1	Full scale flow rate 1
B.qty dm3	1.00000	3.2	Batching quantity
FS2 g/s	4908.7	3.3	Full scale flow rate 2
Pls1=g	1000.00	3.4	Pulse value on channel 1
Tpls1=ms	0050.0	3.5	Duration of the pulse generated on channel 1
Pls2=g	1000.00	3.6	Pulse value on channel 2
Tpls2=g	0050.0	3.7	Duration of the pulse generated on channel 2
Frq1=Hz	1000.00	3.8	Full scale frequency for channel 1 (0.1Hz-1000.0Hz)
Frq2=Hz	1000.00	3.9	Full scale frequency for channel 2 (0.1Hz-1000.0Hz)

MEASURES

```
MAIN MENU
 1-Sensor
 2-Units
 3-Scales
 4-Measure
 5-Alarms
 6-Inputs
 7-Outputs
 8-
 9-
10-
11-
12-
13-
```

MEASURES

Damping	SMART	4.1	Measure filter
Cut-off= %	00.1	4.2	Low flow zero threshold: 0-25% of full scale value
DT Min.	ON	4.3	Automatic calibration verify
T1HC enable	ON	4.4	Automatic change of measurement range
T1HC	OFF	4.5	High immunity inputs

ALARMS

```
MAIN MENU
 1-Sensor
 2-Units
 3-Scales
 4-Measure
 5-Alarms
 6-Inputs
 7-
 8-
 9-
10-
11-
12-
13-
```

ALARMS

Max+ = dm3/s	OFF	5.1	Maximum value alarm set for direct flow rate
Max- = dm3/s	OFF	5.2	Maximum value alarm set for reverse flow rate
Min+= dm3/s	OFF	5.3	Minimum value alarm set for direct flow rate
Min-= dm3/s	OFF	5.4	Minimum value alarm set for reverse flow rate
Hysterisis=%	03	5.5	Hysteresis threshold set for the minimum and maximum flow rate alarms
mA v.alarm=%	000	5.6	Current output value in case of failure
Hz v.alarm=%	000	5.7	Frequency output value in case of alarms

INPUTS

```
MAIN MENU
 1-Sensor
 2-Units
 3-Scales
 4-Measure
 5-Alarms
 6-Inputs
 7-Outputs
 8-
 9-
10-
11-
12-
13-
```

INPUTS

T+ reset	OFF	6.1	Total direct (positive) flow totalizer reset enable
P+ reset	OFF	6.2	Partial direct (positive) flow totalizer reset enable
T- reset	OFF	6.3	Total reverse (negative) flow totalizer reset enable
P- reset	OFF	6.4	Partial reverse (negative) flow totalizer reset enable
Count lock	OFF	6.5	Totalizer counting lock command
Meas.lock	OFF	6.6	Measure zero lock command
Calibration	OFF	6.7	Calibration external command
Range change	OFF	6.8	Range change external command

The manufacturer guarantees only English text available on our web site www.isoil.com

OUTPUTS

MAIN MENU
1-Sensor
2-Units
3-Scales
4-Measure
5-Alarms
6-Inputs
7-Outputs
8-Communication

OUTPUTS

Out1	PULSES+	7.1	Output 1 functions
Out2	PULSES-	7.2	Output 2 functions
Out mA1	4_22 +/-	7.3	Choice of the function and the range of current output n.1
Out mA2	4_22 +/-	7.4	Choice of the function and the range of current output n.2
A1S	4.9087	7.5	Full Scale value for analog out1
A2S	4.9087	7.6	Full Scale value for analog out2

COMMUN.

MAIN MENU
1-Sensor
2-Units
3-Scales
4-Measure
5-Alarms
6-Inputs
7-Outputs
8-Communication

COMMUNICATION

HART pr.	05	8.1	HART packet byte preambles
HART O. C.	ON	8.2	HART bus output control
Dev. Addr	001	8.3	Device communication address number
Speed=bps	9600	8.4	MODBUS link speed
Parity=	NO	8.5	MODBUS link parity
Delay=ms	00	8.6	MODBUS reply delay
C. timeout	2	8.7	Maximum delay between chars (frames) MODBUS

HART REGISTERED

DISPLAY

MAIN MENU
1-Sensor
2-Units
3-Scales
4-Measure
5-Alarms
6-Inputs
7-Outputs
8-Communication
9-Display
10-Data logger
11-Functions

DISPLAY

Language	EN	9.1	Choice of the language
Contrast	5	9.2	Display contrast
Disp.time=s	020	9.3	Display/keyboard inactivity time
D.rate=Hz	5	9.4	Display updating frequency: 1-2-5-10 Hz
Disp. Fn.	1	9.5	Display function number
Disp.lock	ON	9.6	Display function selection lock
Part. Tot	ON	9.7	Partial totalizer enable
Neg. Tot.	ON	9.8	Negative totalizer enable
Net tot.	ON	9.9	Net totalizer enable
Disp.date	ON	9.10	Time and date display enable
Quick start	ON	9.11	Quick start menu visualization

The manufacturer guarantees only English text available on our web site www.isoil.com

DATA LOGGER

```
DATA LOGGER
D.logger en.          ON
Meas. units           ON
Field separat.         ;
Decimal separ.         .
Interv.          01:01:00
Log T+                ON
Log P+                ON
Log T-                ON
Log P-                ON
Log TN                ON
Log PN                ON
Log Q (UM)            ON
Log Q (%)             ON
Log AL.EV             ON
Log STR               ON
Log BTS               ON
Log IBV               ON
Log EDC               ON
Log EAC               ON
Log EIZ               ON
Log SCV               ON
```

```
MA
  1-
  2-
  3-
  4-
  5-
  6-
  7-Outputs
  8-Communication
  9-Display
10-Data logger
11-Functions
12-Diagnostic
13-System
```

10.1	Data logger enabling
10.2	Measure units recording enable
10.3	Field separator character
10.4	Decimal separator character
10.5	Sampling interval
10.6	Enable logging of total direct totalizer
10.7	Enable logging of partial direct totalizer
10.8	Enable logging of total reverse totalizer
10.9	Enable logging of partial reverse totalizer
10.10	Enable logging of total net totalizer
10.11	Enable logging of partial net totalizer
10.12	Enable logging of flow rate in measure unit
10.13	Enable logging of flow rate in percentage
10.14	Enable logging of alarm events
10.15	Enable logging of sensor test results
10.16	Enable logging of board temperature
10.17	Enable logging of internal board voltage
10.18	Enable logging of electrodes DC voltage
10.19	Enable logging of electrodes AC voltage
10.20	Enable logging of electrodes impedance
10.21	Enable logging of sensor coils value

FUNCTIONS

```
FUNCTIONS
T+ reset
P+ reset
T- reset
P- reset
Load Sens.P.def
Load Conv.P.def
Save Sens.P.def
Save Conv.P.def
Calibration
Display
```

```
MAI
  1-
  2-
  3-
  4-
  5-
  6-
  7-
  8-
  9-
10-Data logger
11-Functions
12-Diagnostic
13-System
```

11.1	Execute immediate reset of total direct totalizer
11.2	Execute immediate reset of partial direct totalizer
11.3	Execute immediate reset of total reverse totalizer
11.4	Execute immediate reset of partial reverse totalizer
11.5	Load sensor factory default
11.6	Load converter factory default
11.7	Save sensor factory default values
11.8	Save converter factory default values
11.9	Execute immediate internal circuit calibration

DIAGNOSTIC

```
DIAGNOSTIC
Self test
Test display
Sens. verify
Flow sim. =           ON
Display measures
Disp.Comm.Vars
Display graphs
Gen. sens. set
SD card info
Firmware info
S/N=              999001
WT=          002:21:00:22
```

```
MAI
  1-
  2-
  3-
  4-
  5-
  6-
  7-Outputs
  9-Display
10-Data logger
11-Functions
12-Diagnostic
13-System
```

12.1	Self test diagnostic function
12.2	Function tests physical display
12.3	Sensor verify diagnostic function
12.4	Flow rate simulation enabling
12.5	Display internal measured value
12.6	Display comm. diagnostic values
12.7	Display measure as graphs
12.8	Generic sensor parameters set
12.9	Sd card status informations
12.10	Firmware version/revision
12.11	Board serial number
12.12	Total working time

The manufacturer guarantees only English text available on our web site www.isoil.com

SYSTEM

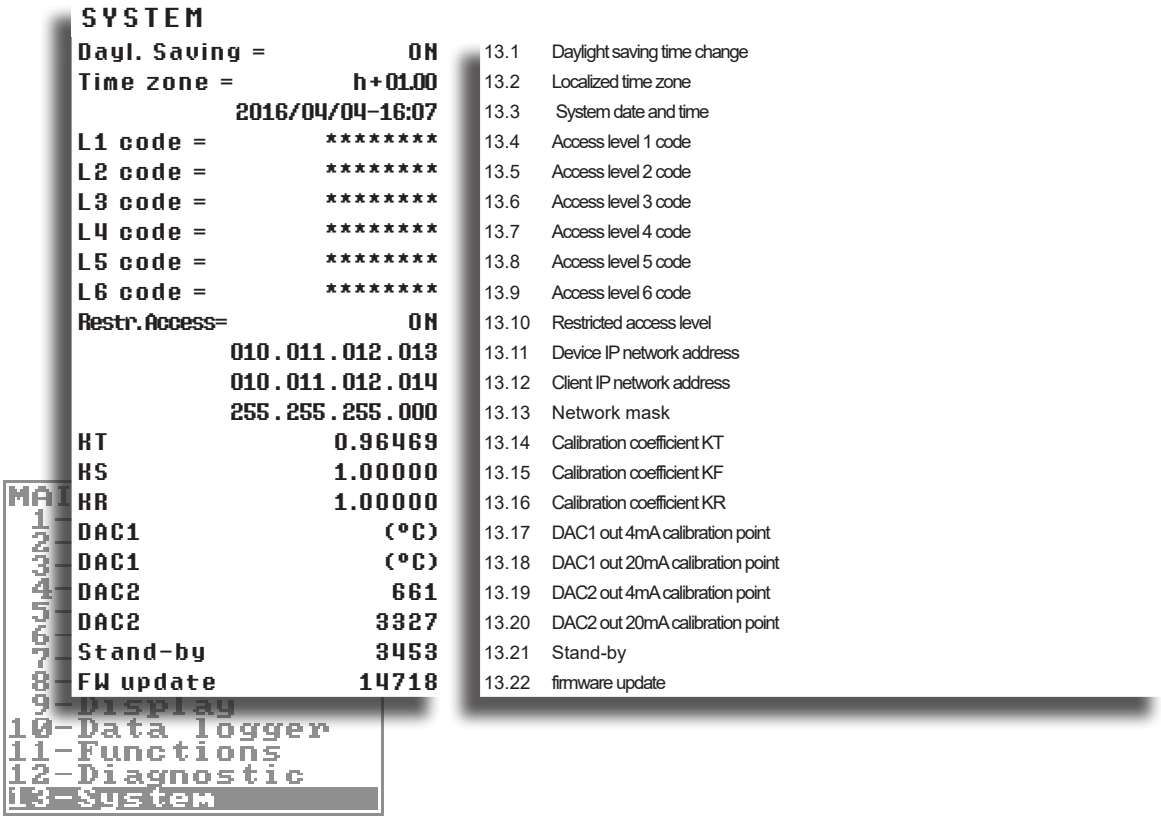

The manufacturer guarantees only English text available on our web site www.isoil.com

FUNCTIONS DESCRIPTION

Here below the explanation on how the rows of menu are described.

Menu visualized on the converter (from 1 to 13)

MENU 1 - SENSOR

(POS. 1.1) ***Sensor Model***	**[S. model xxx]**	***AL4***	**[SMODL]**

Access level

MCP command

Convert request1

Synthetic description of the function

The following picture describes where to find the name of the MCP functions in MCP-software.
More info see MCP manual.

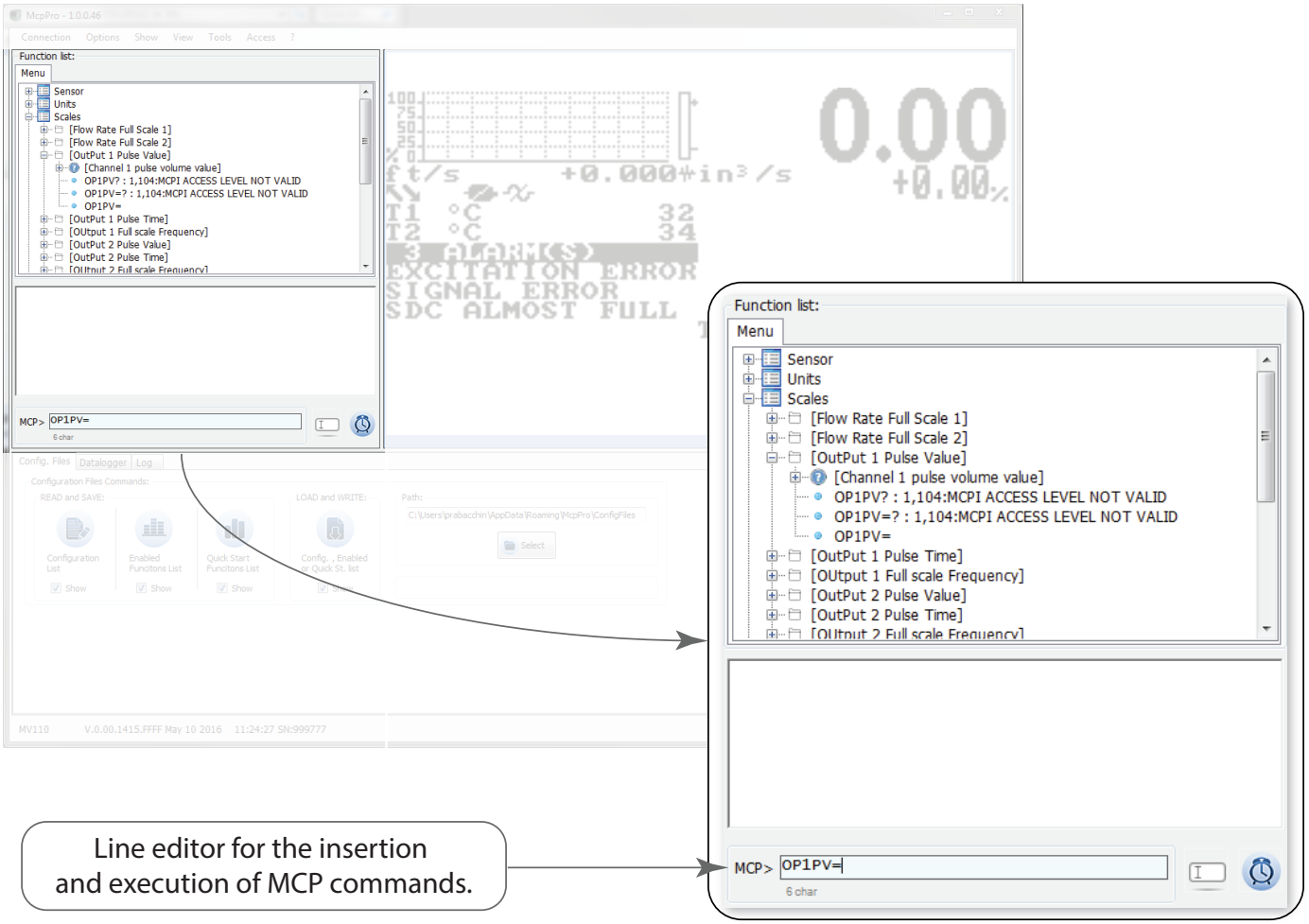

The manufacturer guarantees only English text available on our web site www.isoil.com

MENU 1 - SENSOR

(POS. 1.1) *Sensor model* **[S. model xxx]** ***AL4*** **[SMODL]**

Enter the first two characters of the serial number of the sensor as on the sensor label.

(POS. 1.2) *Lining Type* **[Lining= UNSPEC.]** ***AL4*** **[LIMAT]**

Flow sensor lining material type. (PFA; PU-TDI; ALON; PEEK; HR; PP; PA-11; PTFE-HT; PTFE)

(POS. 1.3) *Type of sensor* **[S. type= FULL BORE]** ***AL4*** **[STYPE]**

Select the sensor type of full-bore or insertion.

(POS. 1.4) *Unit type* **[U.type= METRIC]** ***AL4*** **[SUTYP]**

Select type of measure unit of sensor's parameter. Values metric or imperial (inch).

(POS. 1.5) *Diameter* **[Diam.= mm xxx]** ***AL4*** **[PDIMV]**

Select the nominal diameter of the sensor (0-2500). ND is written on the sensor label.

(POS. 1.6) *KA* **[KA= + xx.xxx]** ***AL4*** **[CFFKA]**

KA factor: calibration coefficient

(POS. 1.7) *KA -* **[KA= - xx.xxx]** ***AL4*** **[CFKAN]**

KA factor: calibration coefficient for negative flow. This function is showed only if at least 1 negative KL value is set.

(POS. 1.8) *KZ* **[KZ= +/- xxxxx]** ***AL4*** **[CFFKZ]**

Calibration Factor. KZ

(POS. 1.9) *KD* **[KD= +/- xxxxx]** ***AL4*** **[CFFKD]**

Calibration Dynamic Factor.

(POS. 1.10) *Insertion position* **[Ins.position= x]** ***AL4*** **[SIPOS]**

This function is active with POS.1.3 on "Insertion". See the insertion sensor manual for more details

(POS. 1.11) *KP dynamic* **[KP dynamic= ON/OFF]** ***AL4*** **[CFFKP]**

This function is active with POS.POS. 1.3 see page 27 set on insertion. See manual of insertion sensor for more details

(POS. 1.12) *Ki* **[Ki= +/- xx.xxx]** ***AL4*** **[CFFKI]**

This function is active with POS. 1.3 see page 27 set on insertion. See manual of insertion sensor for more details

The manufacturer guarantees only English text available on our web site www.isoil.com

(POS. 1.13) ***Kp*** **[Kp = +/- xxxxx]** ***AL4*** **[SIDKP]**

This function is active with POS. 1.3 see page 27 set on insertion. See manual of insertion sensor for more details

(POS. 1.14) ***KC*** **[KC= +/- xx.xxx]** ***AL4*** **[CFFKC]**

Calibration Factor. This function is activated if the sensor model is NOT present on the sensors table standard parameters

(POS. 1.15) ***Coils Ex.Current*** **[C.Curr.= mA xxx.x]** ***AL4*** **[CEXCC]**

Excitation coils current. This function is activated if the sensor model is NOT present on the sensors table standard parameters

(POS. 1.16) ***C. Reg. PB*** **[C.Reg.PB= xxx]** ***AL4*** **[CRPRB]**

Current regulator parameter. This function is activated if the sensor model is NOT present on the sensors table standard parameters

(POS. 1.17) ***C. Reg. DK*** **[C.Reg. DK = xxx]** ***AL4*** **[CRDER]**

Current regulator parameter. This function is activated if the sensor model is NOT present on the sensors table standard parameters

(POS. 1.18) ***Preamplifier*** **[Preamplif.= ON]** ***AL4*** **[PREIN]**

This function enable/disable the presence of the preamplifier. The use of the preamplifier inhibit the possibility to use BIV and Empty Pipe Detection.

(POS. 1.19) ***S. Freq.*** **[S.Freq.= Hz xx]** ***AL4*** **[SFREQ]**

Measure sampling frequency. This function is activated if the sensor model is NOT present on the sensors table standard parameters.

(POS. 1.20) ***Empty Pipe Detection*** **[E.P.Detect= ON]** ***AL4*** **[EPDEN]**

Enables the empty pipe detection function. This function is useful to keep the meter lock to zero when the pipe become empty.

(POS. 1.21) ***Empty pipe thr.*** **[R max= Kohm xxxx]** ***AL4*** **[EPDTH]**

Maximum resistance value at the inputs (electrodes) determine the empty pipe condition. This feature is enabled only if the "1.19" page 27 Empty Pipe Detection is ON.

(POS. 1.22) ***Electrodes cleaning*** **[El. cleaning=AVG]** ***AL4*** **[ELCLN]**

This function is useful to keep the electrodes clean; the allowed values are: OFF, minimum, average and maximum. It is **not recommended** to use this function when the liquid has a conductivity less than 100µS/cm (**set to OFF**).

(POS. 1.23) ***Sensor Cable*** **[S.cable=m xxx]** ***AL4*** **[SCALN]**

Lenght of cable between sensor and converter on separate version.

(POS. 1.24) ***Signal error delay*** **[S.err.delay=m xxx]** ***AL4*** **[SEALT]**

Delay before generating error. This function is useful to prevent unexpected lock to zero of measure caused by sporadic events (empty pipe, excitation error, signal error)

(POS. 1.25) ***Sensor verify*** **[Sens. verify= OFF]** ***AL3*** **[ASVFE]**

Enable the Automatic sensor verification (see BIV optional function).

The manufacturer guarantees only English text available on our web site www.isoil.com

(POS. 1.26) ***Zero point calibration*** **[Zero point cal.]**

This feature appears only when the process conditions are as follow:

- measure filters recommended (Damping) set to SMART 2 second / 5 second
- stable flow rate and lower than 0.1% of the absolute scale (10 m/s)
- It must have elapsed at least 10 minutes after the last significant change of flow rate

When the above conditions are met, the zero point calibration function will appears on the display, press the "Enter / ESC" and automatically the procedure will start.
NOTICE: Be sure that the the sensor is completely full of liquid and perfectly still. Even subtle movements of the fluid can cause significant errors, therefore proceed with great care.

(POS. 1.27) ***Coefficient KL*** **[KL=XX +/- XXXXXXXXX]** ***AL4*** **[SETKL]**

Linearization coefficient for negative flow, reserved to the service. This command is only showed if SMODL = 000.

MENU 1 - SENSOR: ONLY MCP FUNCTIONS

Sensor Coils Time A **[MCP ONLY]** ***AL4*** **[SCTMA]**

Reference sensor coil time A

Sensor Coils Time B **[MCP ONLY]** ***AL4*** **[SCTMB]**

Reference sensor coil time B

Sensor Coils Resistance **[MCP ONLY]** ***AL4*** **[SCRES]**

Reference sensor coil resistance

Resistance E1 **[MCP ONLY]** ***AL4*** **[SE1RR]**

Resistance value of E1 electrodes

Resistance E2 **[MCP ONLY]** ***AL4*** **[SE2RR]**

Resistance value E2 electrodes

Sensor Coils Temperature Reference **[MCP ONLY]** ***AL4*** **[SCTRF]**

sensor data reference temperature. Temperature measured on the coils of the sensor at the time of saving the instrument reference data for B.I.V. function The temperature value in degrees Celsius, which owns the sensor.
Note: the temperature must be estimated on the basis of the place of the sensor installation.

The manufacturer guarantees only English text available on our web site www.isoil.com

MENU 2 - UNITS

WARNING: The totalizer value is updated and changed depending on the setting of unit value.
The scale change may cause accuracy loss depending of rounding up.
For example, if T +=0,234 liters with 3 decimals, it become T +=0.001 m³ losing 0.234 liters in rounding up.

(POS. 2.1) ***Diameter*** **[Diam.= mm]** ***AL2*** **[SDIUM]**

Sensor diameter unit of measure (mm or inch)

(POS. 2.2) ***S.cable length unit of m. type*** **[S.Cable= m]** ***AL2*** **[SCAUM]**

Sensor cable length for separate version. Select m or foot.

(POS. 2.3) ***Flow rate unit of m. type*** **[FR unit= METRIC]** ***AL2*** **[FRMUT]**

Flow rate type measure unit. Select metric or not metric (Imperial units)

(POS. 2.4) ***Pulse 1 unit of m. type*** **[PL1 unit= METRIC]** ***AL2*** **[PL1UT]**

This function is active with POS. 7.1 see page 29 enable.
This function changes the choice of measure unit POS. 3.4 see page 28
Pulse 1 type measure unit: metric or not metric (Imperial units).

(POS. 2.5) ***Pulse 2 unit of m. type*** **[PL2 unit= METRIC]** ***AL2*** **[PL2UT]**

This function is active with POS. 7.2 see page 29 enable.
This function changes the choice of measure unit POS. 3.6 see page 28
Pulse 2 type measure unit: metric or not metric Imperial units).

(POS. 2.6) ***Totalizer direct unit of m. type*** **[T+ unit= METRIC]** ***AL2*** **[TTPUT]**

Setting total direct totalizer measure unit type: metric or not metric Imperial units).
This function changes the values measure unit on POS. 2.7 see page 27

(POS. 2.7) ***Totalizer direct unit of measure*** **[T+ unit= dm³]** ***AL2*** **[TTPUM]**

Setting total direct totalizer measure unit.
This function visualized on visualization pages.

(POS. 2.8) ***Totalizer direct Deci.Point pos.*** **[T+ D.P.= x]** ***AL2*** **[TTPDP]**

Setting total direct totalizer decimal point position.
Example: T+D.P.= 3 visualized value T+dm³ 0.000 / T+D.P.= 2 visualized value T+dm³ 0.00

(POS. 2.9) **Total.** ***Part. direct unit of m. type*** **[P+ unit= METRIC]** ***AL2*** **[TPPUT]**

This function is active with POS. 9.7 see page 29 enable.
Setting partial direct totalizer measure unit type: metric or not metric (Imperial units).
This function changes the values measure unit on POS. 2.10 see page 27 .
It is visualized on visualization pages.

(POS. 2.10) **Total.** ***Partial+ unit of measure*** **[P+ unit= dm³]** ***AL2*** **[TPPUM]**

Setting partial direct totalizer measure unit.
This function visualized on visualization pages.

The manufacturer guarantees only English text available on our web site www.isoil.com

(POS. 2.11) Total. *Part direct Dec. Point pos.* **[P+ D.P.= x]** ***AL2*** **[TPPDP]**

Setting partial direct totalizer decimal point position.
Example: P+D.P.= 3 visualized value P+dm³ 0.000 / P+D.P.= 2 visualized value P+dm³ 0.00

(POS. 2.12) *Total. T reverse unit of m. type* **[T- unit= METRIC]** ***AL2*** **[TTNUT]**

This function is active with POS. 9.8 see page 29, enabled.
Setting total reverse totalizer measure unit type: metric or not metric (Imperial units).
This function changes the values measure unit on POS. 2.13 see page 27.
It is visualized on visualization pages.

(POS. 2.13) *Total. T reverse unit of meas.* **[T- unit= dm³]** ***AL2*** **[TTNUM]**

Setting total reverse totalizer measure unit.
This function visualized on visualization pages.

(POS. 2.14) *Total. T reverse Dec.Point* Pos. **[T- D.P.= x]** ***AL2*** **[TTNDP]**

Setting total reverse totalizer decimal point position.
Example: T- D.P.= 3 visualized value T- dm³ 0.000
T- D.P.= 2 visualized value T- dm³ 0.00

(POS. 2.15) Total. *Part. reverse unit of m. type* **[P- unit= METRIC]** ***AL2*** **[TPNUT]**

This function is active with POS. 9.8 see page 29, enable.
Setting partial reverse totalizer measure unit type: metric or not metric (Imperial units).
This function changes the values measure unit on POS. 2.16 see page 27
It is visualized on visualization pages.

(POS. 2.16) Total. *Part. reverse unit of measure* **[P- unit= dm³]** ***AL2*** **[TPNUM]**

Setting partial reverse totalizer measure unit.
This function visualized on visualization pages.

(POS. 2.17) Tot *Part. reverse Deci. Point* Pos. **[P- D.P.= x]** ***AL2*** **[TPNDP]**

Setting partial reverse totalizer decimal point position.
Example: P- D.P.= 3 visualized value P-dm³ 0.000
P- D.P.= 2 visualized value P-dm³ 0.00

(POS. 2.18) *Temperature unit of measure* **[Temp. unit= C°]** ***AL2*** **[TMPUT]**

Setting temperature measure unit.

(POS. 2.19) *Mass units enable* **[Mass units= ON/OFF]** ***AL2*** **[MSSUE]**

Enable or Disable the selection of mass unit of full scale set.

(POS. 2.20) *Specific Gravity* coeffic. **[Sg= Kg/dm³ x.xxxx]** ***AL2*** **[VMSGC]**

Setting specific gravity coefficient. This Function is active with POS. 2.19 see page 27, enable.

The manufacturer guarantees only English text available on our web site www.isoil.com

MENU 3 - SCALE

(POS. 3.1-2) ***Flow Rate Full Scale 1-2*** **[FS1-2= l/s xxxx.x]** ***AL2*** **[FRFS1-FRFS2]**

The FS2 (full scale flow rate 2) is active with POS. 6.6 see page 28 ,enabled.
The full scale is used to indicate to the maximum meter's flow rate. The full scale should be chosen carefully as it's parameters are used for several other parameters.There are three fields to fill in order to set this parameter, from left to right: 1) measure unit, 2) time unit of measure and 3) numeric value. The selection is made by positioning the cursor on the field to modify. To change the type unit of measure (metric, Imperial units, mass or volume) see POS. 2.3 see page 27 and POS. 2.19 see page 27 and POS. 2.20 see page 27. The value of Fs1-2 depend nominal diameter POS. 1.4 see page 27. The following tables shown the units of measure available and the conversion factor by comparison with 1dm3 and 1kg. The converter accepts any kind of combination of units of measure satisfying both the following conditions:

- ❑ Numeric field value 99999
- ❑ 1/25 fsmax ≤ numeric field value ≤ fsmax.

Where fsmax is the maximum full scale value corresponding to the sensor, equal to a 10m/s liquid speed. The measure units are shown as appear on the display. The Imperial units units are diversified by using capital and small characters.

METRIC	
cm³	Cubic centimeter
ml	Milliliter
l	Liter
dm³	Cubic decimeter
dal	Decalitre
hl	Hectolitre
m³	Cubic meter
ML	Mega Liter

NOT METRIC	
in³	Cubic inch
Gal	American gallon
ft³	Cubic foot
bbl	Standard barrel
BBL	Oil barrel
hf³	Hecto cubic feet
KGL	American Kilo gallon
kf³	Kilo cubic feet
ttG	Ten thousand gallons
IGL	Imperial gallon
IKG	Imperial Kilo gallon
Aft	Acre foot
MGL	Mega gallon
IMG	Imperial mega gallon

MASS UNIT NOT METRIC	
Oz	Ounce
Lb	Pound
Ton	Short tons

MASS UNIT METRIC	
g	Gram
kg	Kilogram
t	Ton

When a measure mass unit is set, the specific gravity function is automatically enabled by the system. Please, note that the mass measure is heavily affected by the temperature. With certain liquids this may cause significant measurement errors. The following measure of time units can be selected: **s** = second, **m** = minute, **h** = hour, **d** = day .

NOTES FOR USING THE MCP INTERFACE

The command FRFS1 =? and command FRS2 = ?, edited by MCP software, return a list of only the unit compatible with the nominal diameter set. If the sensor is insertion type and the diameter is zero, the only possible unit is m/s if the flow rate were chosen metric units, else f/s for the unit of measurement non metric.

The manufacturer guarantees only English text available on our web site www.isoil.com

(POS. 3.2) *Batching quantity* *AL2* [BTQTY]

This function is enabled when output1 is set to "BATCHING".
It allows to set the unit of measure and the batching quantity.

(*POS. 3.3-3.5) Output Pulse 1-2* [Pls1-2= dm³ x.xxxxx] *AL2* [OP1PV-OP2PV]

Pls1 and Pls2 is active with POS. 7.1 see page 29 and POS. 7.2 see page 29, enable and setting pulse value on channel 1 and channel 2. This function allows the user to set a signal (a pulse) to be given from the converter when a defined amount of liquid has passed through the sensor. To set the parameter, complete the 2 fields, from left to right: 1)measure unit, 2) numeric value. The selection is performed by positioning the cursor in the field to be modified. To change the unit type (metric, British or American, mass or volume) see POS. 2.4 see page 27 and POS. 2.5 see page 27, POS. 2.19 see page 27 and POS. 2.20 see page 27. The value of Pls1-2 depends on nominal diameter POS. 1.4 see page 27. Only those units described (POS. 3.1 see page 28-POS. 3.3 see page 28) above are available to be selected.

(POS. 3.4-3.6) Output1-2 Pulse Time [Tpls1-2= ms x.xxxxx] *AL2* [OP1PT OP2PT]

Tpls1 and Tpls2 is active with POS. 7.1 see page 29 and POS. 7.2 see page 29 enable. Setting duration of the pulse generated on channel 1 and 2.
With the liquid volume to generate the pulse value (POS. 3.4 see page 28 POS. 3.6 see page 28) set by the user. The user must set the corresponding duration of the pulse to be outputed. This value is expressed in milliseconds and has to be between 0.4 and 9999.99. When the high frequency output is present, then the minimum value can type of device is connected to the converter, the user must verify that the set pulse duration is compatible with the external device processing such pulses. If, for example, an electro-mechanical pulse counter is connected, a minimum pulse time of 0.04 milliseconds can be set.
ATTENTION: The converter can not detect problems that may occur; firstly, the pulse is too long the coils may burn out, secondly, if the pulse is too short, the counter may not be able to function, causing damage of the output.

(*POS. 3.7-3.8) Output full scale freq.1-2* [Frq1-2= x.xxxxx] *AL2* [OU1FF-OU2FF]

Frq1 and Frq2 are activated with POS. 7.1 see page 29 and POS. 7.2 see page 29 enabled and set to the value freq+/-/+-. Setting duration of the pulse generated on channel 1 and 2.

The manufacturer guarantees only English text available on our web site www.isoil.com

MENU 4 - MEASURE

(POS. 4.1)*Damping* **[Damping=OFF/SMART/(TIME)]** ***AL3*** **[MFDMP]**

This section of manual is extremely important because the correct setting of the filters allows to obtain a proper response of the instrument to the measured flow rate and the specific requirements of use; as a general rule, consider that, starting from Damping = OFF (no filter applied to the measure), successive values, introduce increasing damping. The following diagrams show the instrument's response to changes in flow rate from 0 to 100%, using the different settings of the damping function.
The SMART is an adaptive filter that adapts automatically to most of the processes (recommended value), making the response of the meter very ready to fast changes of flow and at the same time extremely precise and stable for slow variations. It may be convenient to use a constant damping filter time, where there is a pulsating flow (for example generated by peristaltic pumps). With longer times you get a mean value stable, while with short times the measure will closely follow the flow pulses, but consequently more unstable. NOTE: If the rechargeable battery is active, the damping could be set only in "SMART".

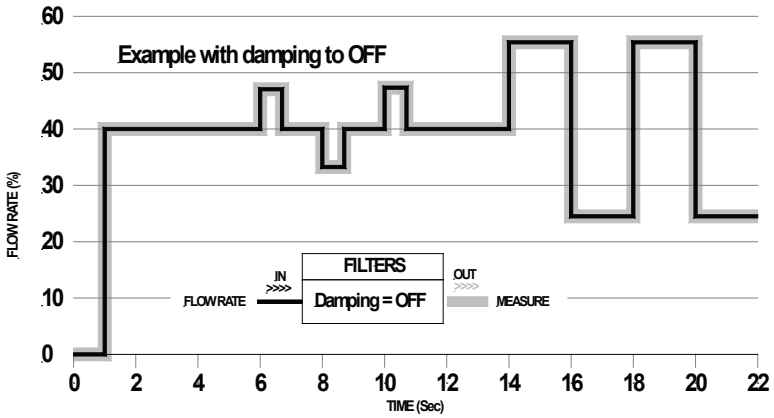

Damping function(OFF). the meter follows the trend of fast changes in flow.

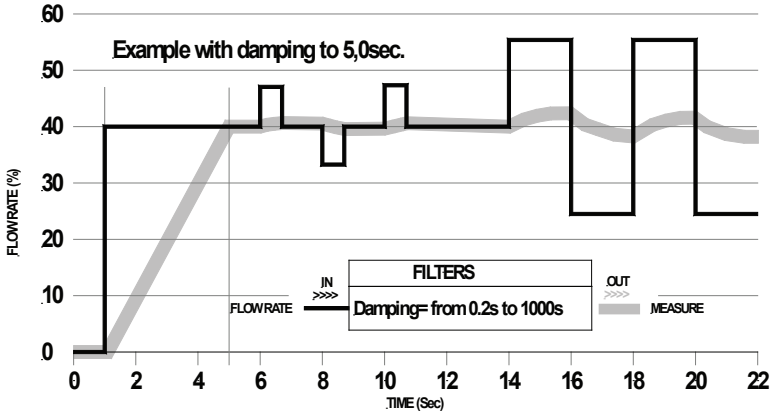

Damping mode based on time (fro 0.2s to 1000s) The measure is averaged over a number of samples determined by the value assigned to the dampening function. When the damping parameter is expressed in seconds, the filter works damping the measurement noise and sudden change of flow rate. Increasing the parameter of damping increases the stability of the measurement.

The manufacturer guarantees only English text available on our web site www.isoil.com

(POS. 4.2) ***Cut-off threshold*** **[Cut-off=% xxx]** ***AL3*** **[MFCUT]**

Setting the low flow cutoff threshold. This function is useful to avoid that flows close to zero, due to the electrical noises from tiny movements of liquid (due for example to vibrations of the pipe) which cause an increasing of the totalizers. The allowed range for this function is 0-25% of full scale set. For most applications a value between 0.5 and 1% is recommended.

(POS. 4.3) ***Calibration verify*** **[Cal.verify=ON]** ***AL3*** **[ACAVE]**

This function enables an automatic verification of board's coefficients. As the converter performs continuously a large number of tests, we recommend to use this function only in presence of wide range of temperature. Instead it is NOT recommended to use it when the instrument is used in metering applications (batch).

(POS. 4.4) ***Automatic scale change enable*** **[Autorange=ON/OFF]** ***AL3*** **[ARNGE]**

Enables the automatic change of scale. The meter may have two different working ranges in order to suit to the variable process conditions. In order to get the best results out of this function it is important range N.2 (Fs2) if enabled is bigger than N.1 (Fs1). When the flow rate increases and reaches the 100% of the full scale 1, then the meter automatically switches to scale 2. When the flow rate decreases again reaching a value on scale 2 equal to the 90% of full scale N.1, then the active scale is 1 again. Allowed values for this parameter: ON/OFF.
Notice: when the autorange is enabled, is not allow to use the manual range change (POS. 6.6 see page 28).
This function does NOT increase the accuracy of the measure; its aim is to increase the resolution of 4/20 mA when the meter work at very low flow rates (typical case the flow rate of water distribution with daytime flow much higher than the night flow). N.B: this function is disabled if the batching function is active

(POS. 4.5) ***High immunity INPUTS*** **[H.imm. inp.]** ***AL4*** **[HIINP]**

The HIINP function (INPut High Immunity filter) introduces a hardware filter to be used ONLY IN CASE OF ABSOLUTE NECESSITY, when the measure is absolutely unstable or it is NOT possible to make the measure, and every possible attempt to reduce or eliminate the noise do not give a positive result, with particular attention of instrument ground connection. When this function is activated (HIINP = ON) the measure will be influenced by an unavoidable error estimated around 1%.

MENU 4 - MEASURE: ONLY MCP FUNCTIONS

Measure Filter Cut-off Threshold 2 **[MCP ONLY]** ***AL3*** **[MFCT2]**

Setting the low flow cutoff threshold, it is similar to the function in 4.2. The value of this function is NOT visible on diplay but only with MCP command.

Dynamic sample analysis **[MCP ONLY]** ***AL4*** **[DYNSA]**

Reserved to the service

Dynamic sample time **[MCP ONLY]** ***AL4*** **[DYNST]**

Reserved to the service

The manufacturer guarantees only English text available on our web site www.isoil.com

MENU 5 - ALARMS

(POS. 5.1) ***Maximum direct flow rate threshold*** **[Max+=XXXXX]** ***AL3*** **[FRAXP]**

Maximum value alarm set for direct flow rate set (expressed in technical units). When the flow rate value exceeds such a threshold, then an alarm message is generated. Setting this parameter to zero disables the alarm generation.

(POS. 5.2) ***Maximum reverse flow rate threshold*** **[Max-=XXXXX]** ***AL3*** **[FRAXN]**

Maximum value alarm set for reverse flow rate set (expressed in technical units). When the flow rate value exceeds such a threshold, then an alarm message is generated. Setting this parameter to zero disables the alarm generation.

(POS. 5.3) ***Minimum direct flow rate threshold*** **[Min+=XXXXX]** ***AL3*** **[FRANP]**

Minimum value alarm set for reverse flow rate set (expressed in technical units). When the flow rate value falls below such a threshold, then an alarm message is generated. Setting this parameter to zero disables the alarm generation.

(POS. 5.4) ***Minimum reverse flow rate threshold*** **[Min-=XXXXX]** ***AL3*** **[FRANN]**

Minimum value alarm set for reverse flow rate set (expressed in technical units). When the flow rate value falls below such a threshold, then an alarm message is generated. Setting this parameter to zero disables the alarm generation.

(POS. 5.5) ***Hysteresis*** **[Hysteresis=% XX]** ***AL3*** **[ATHYS]**

Hysteresis threshold set for the minimum and maximum flow rate alarms. The value of this parameter is expressed as percentage of the full scale value and may be set from 0 to 25%.

(POS. 5.6) ***Current output value in case of failure*** **[mA V.alarm =% XXX]** ***AL3*** **[OCACV]**

The output current signal can be specified by the user in case of failure of either, empty pipe, coils interrupted, or ADC error. The signal current is set as a percentage (0 to 125%) of the 0/4-20mA current. 125% corresponds to 24mA and does not depend on the selected range (0-20/4-20mA).
The NAMUR NE43 recommendation asks for a alarms signalling value for the current output lower than 3.6mA (<18%) or bigger than 21mA (>105%). It would then be preferable to set the value of this function at the 10%, so that the current value in case of the a.m. cases would be 2 mA, allowing the following diagnostics:

- ❑ current < 2mA - 5%: line interrupted, power supply failure or faulty converter;
- ❑ 2mA -5% * current * 2mA + 5%: hardware alarm;
- ❑ 4mA * current * 20mA: normal working range;

20mA < current * 22mA: out of range, measure above 100% f.s.

(POS. 5.7) ***Frequency output value in case of failure*** **[Hz V.alarm=%XXX]** ***AL3*** **[OFACV]**

This function is active with POS. 7.1 see page 29 and POS. 7.2 see page 29 enable to (FREQ.+, FREQ.-, FREQ.±) To set the frequency value assigned to the on/off output in one or more of the following failure cases:

- ❑ Empty pipe; Coils interrupted ; ADC error. Allowable range is from 0 to 125% of the frequency full scale value. Although there are no specific rules regulating cases such as these, it would be convenient to use the failure information as follows:
- ❑ 0% Hz * frequency * 100% f.s.: normal working range;
- ❑ 100% f.s. < frequency * 210% f.s.: overflow, measure above the 100% of the f.s.;
- ❑ 115% f.s. * frequency * 125% f.s.: hardware alarm condition.

The manufacturer guarantees only English text available on our web site www.isoil.com

MENU 6 - INPUTS

WARNING!
THIS MENU IS NOT ENABLED WHEN THE BATCHING FUNCTION IS ACTIVE.

(POS.6.1-2) ***T.direct(pos.)flowtot./part reset enable*** **[T/P+/RESET=ON/OFF]** ***AL3*** **[VTTPE] [VTPPE]**
When one of this function is enabled, the related totalizer + may be reset through the on/off input.

(POS.6.3-4) ***T.rev.(neg)flowtot./part reset enable*** **[T/P-/RESET=ON/OFF]** ***AL3*** **[VTTNE] [VTPNE]**
When one of this function is enabled, the related totalizer - may be reset through the on/off input.

(POS. 6.5) ***Totalizers counting lock command*** **[COUNT LOCK= ON/OFF]** ***AL3*** **[TCLIE]**
Totalizers counting lock command enable. When this function is active, applying a voltage on the on/off input terminals the system stops the totalizers no matter which is the flow rate.

(POS. 6.6) ***Measure zero lock input enable*** **[Meas.lock=ON/OFF]** ***AL3*** **[MSLIE]**
When this function is active (ON), applying a voltage on the on input terminals, the measurement is stopped, the meter will display zero flow.

(POS. 6.7) ***Calibration Func. input enable*** **[Calibration=ON/OFF]** ***AL3*** **[CALIE]**
When this function is active, applying a voltage on the on/off input terminals the meter performs a autozero calibration cycle. ATTENTION: If the voltage pulse is less than 1 sec., the meter performs a calibration cycle to compensate possible thermal drifts. If the voltage pulse is more 1 sec, the meter performs a zero calibration measure. To perform the calibration it is absolutely necessary for the sensor to be full of liquid and that the liquid is perfectly still. Even very small movement of the liquid may affect the result of the calibration, and, consequently, the accuracy of the system.

(POS. 6.8) ***Flow rate range change inp.*** **[RANGE CHANGE=ON/OFF]** ***AL3*** **[SRCIE]**
Range change external command enable. When this function is enabled, applying a voltage on the on/off input terminals the meter switches to the second measuring range (Fs2).
N.B.: the autorange doesn't allow to use the manual range change see (POS. 4.4 see page 28).

The manufacturer guarantees only English text available on our web site www.isoil.com

MENU 7 - OUTPUTS

(POS. 7.1) ***Output 1 function selection*** **[Out1=XXXXXX]** ***AL3*** **[OUT1F]**

Function choice corresponding to digital Output 1. The functions are listed in the table below.

(POS. 7.2) ***Output 2 function selection*** **[Out2=XXXXXX]** ***AL3*** **[OUT2F]**

Function choice corresponding to digital Output 2. The functions are listed in the table below.

FUNCTIONS FOR OUTPUTS 1 AND 2

- **OFF:** DISABLE
- **MAX AL. +:** MAX DIRECT FLOW RATE OUTPUT (ENERGIZED = AL. OFF)
- **MIN AL. +:** MIN DIRECT FLOW RATE OUTPUT (ENERGIZED = AL. OFF)
- **MAX/MIN+/-:** MAX/MIN DIRECT FLOW RATE OUTPUT (ENERGIZED = AL. OFF)
- **MAX AL.-:** MAX INVERSE FLOW RATE OUTPUT (ENERGIZED = AL. OFF)
- **MIN AL.-:** MIN INVERSE FLOW RATE OUTPUT (ENERGIZED = AL. OFF)
- **MAX/MIN-:** MAX/MIN INVERSE FLOW RATE OUTPUT (ENERGIZED = AL. OFF)
- **P.EMPTY:** EMPTY PIPE ALLARM OUTPUT (ENERGIZED = AL. OFF)
- **HARDWARE AL.:** SUM OF ALL ALARMS ”energized interrupted ” AND ”error input signal ”
- **OVERFLOW:** OUT OF RANGE ALLARM OUTPUT (ENERGIZED = FLOWRATE OK)
- **ALL ALARMS:** SUM OF ALL ALARMS POSSIBLE
- **EXT. COMM:** OUTPUT MAY TAKE A STATE DEPENDENT ON AN EXTERNAL CONTROL REMOTELY VIA MCP
- **FLOW RATE SIGN.:** FLOW DIRECTION (ENERGIZED WHEN FLOW IS NEGATIVE)
- **SCALE:** INDICATION SCALE
- **FREQ.+:** FREQUENCY POSITIVE FLOWRATE
- **FREQ.-:** FREQUENCY NEGATIVE FLOWRATE
- **FREQ.+/-:** FREQUENCY POSITIVE/NEGATIVE FLOWRATE
- **PULSES.+:** PULSE POSITIVE FLOW RATE
- **PULSES.-:** PULSE NEGATIVE FLOW RATE
- **PULSES+/-:** PULSE NEGATIVE/POSITIVE FLOW RATE
- **BATCHING:** IT’S POSSIBLE TO SET A QUANTITY OF VOLUME THAT HAVE TO BE DELIVERED DURING AN ACTUATOR (VALVE) OPENING-CLOSING CYCLE

The manufacturer guarantees only English text available on our web site www.isoil.com

BATCHING

Through this function, it' s possible to set the volume quantity that must be delivered, managing the opening and the closing of the valve.
To activate it, follow these instructions:

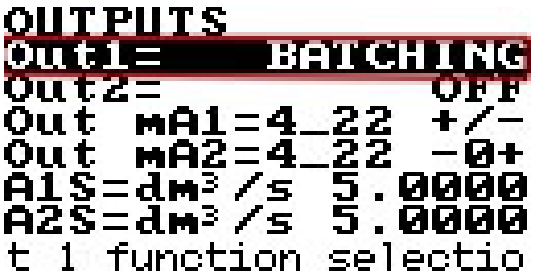

1. Enter to the main menu;
2. Select Output menu;
3. Set the Out1 function on "BATCHING"

With batching activated, the display visualizes one main page:

The batching parameters settings can be customized according to what the instrument use and application is thought to.

FUNCTION	FUNCTION N° POS.	SETTING
Cut-off	"4.2" pag28	It must be set so that the flow is stably zero when the valve is closed
Damping	"4.1" pag28	It must be set on the minimum value allowed. If T batching ≤ 1s, filters must be disabled

The manufacturer guarantees only English text available on our web site www.isoil.com

BATCHING QUANTITY SETTINGS:

By display	Enter to the 3. Scale menu; Set the B.qty (batching quantity) value	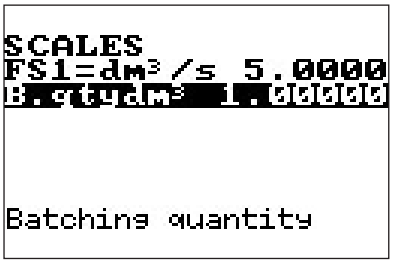
By MCP command	"BTQTY?" Through this command it can be set both the unit measure or the quantity (see MCP manual)	VALUES: 0:'ml'|1:'cm3'|2:'l'|3:'dm3'|4:'dal'|5:'hl'|6:'m3'|7:'Ml',0.00001 <> 99999.9
By ModBus interface	Using the ModBus command 16 (see MODbus manual)	

BATCHING OPERATIONS:

ACTION:	OPERATION:	NOTES:
Start/stop by display	Press "UP" key on the keyboard	When the batching process is manually stopped, the OUT1 function is disabled and the batching cycle is interrupted with the valve closing. Every time the batching cycle starts, the set quantity counter and the alarms are reset.
Start/stop by MCP	Type MCP command "BTACT"	
Start/stop by ingresso	External signal connected to digital input 1. N.B: The signal must be a pulse and its duration must be greater than the time of the measurement cycle. See "DIGITAL INPUT ON/OFF OPERATION" page 15	
Start/stop by ModBus	Send the MODbus command 5 (see MODbus manual)	
Visualize batching status by display	Batching in progress symbol on the display	
Visualize batching status by MCP	Type the MCP command "BTACT?" If = 0 the actuator is closed If = 1 the actuator is open (batching in progress)	

The manufacturer guarantees only English text available on our web site www.isoil.com

The batching process automatically stops the valve when the batching quantity reaches the set value. If the delivered volume doesn't match to the required one, It is necessary to notice empirically the value to set. In this way It is possible to compensate any "delays" in the process after the stop signal.

EXAMPLE WITH DELIVERED VOLUME = 1 dm³

COMPANSATED BATCHING

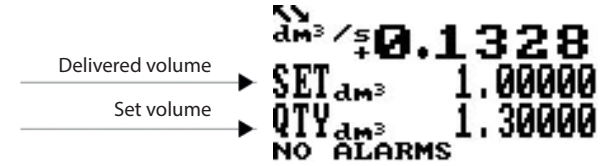

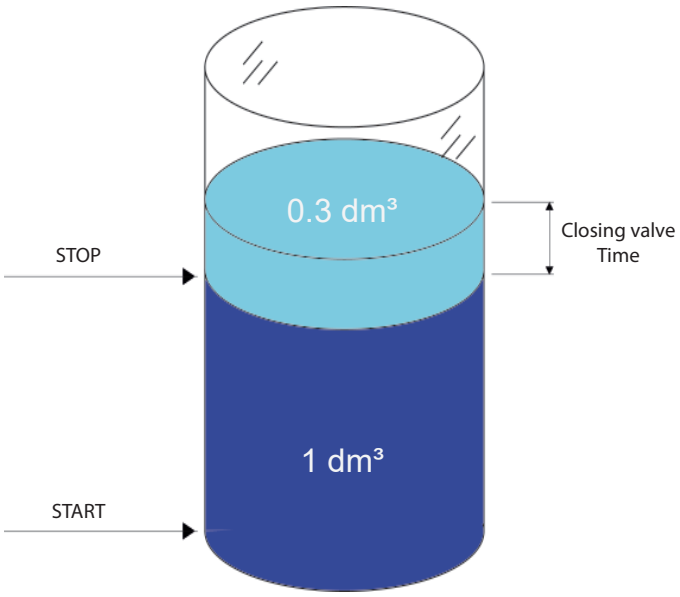

NOT COMPASATED BATCHING

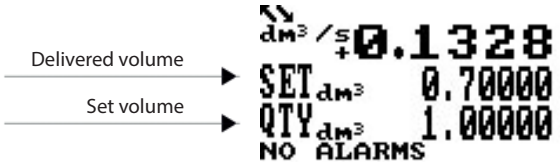

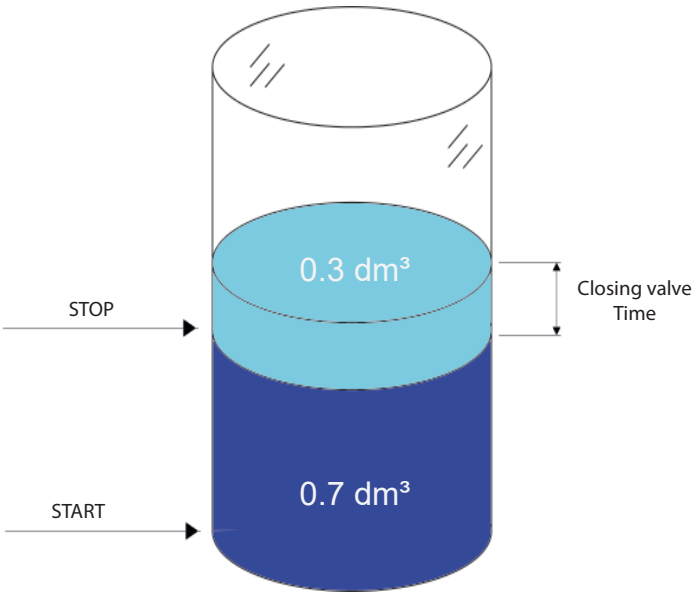

The manufacturer guarantees only English text available on our web site www.isoil.com

BATCHING ALARMS

NAME	DESCRIPTION	NOTES
Batching time-out	It activates after 4 seconds from the start command, when any flow is detected	When alarms activate the actuator close automatically Both alarms can be visualized remotely, setting the usc2 function on "HARD W. AL" or "ALL ALARMS"
Overflow	It activates when the batching quantity is more than 20% of the set one.	

Visualize alarms via display:
The presence of a dosage alarm is highlighted by the message: "ALARM"

Visualize alarms via MCP:
Batching page: The presence of a batching alarm is highlighted by the message: "ALARM"
Alarms page: The presence of a batching alarm is highlighted by the message: "BATCHING ERR."

ATTENTION!!

DISABLED FUNCTIONS WHEN BATCHING IS ACTIVATED

"1.19" pag27
"4.3" pag28
"4.4" pag28
"9.7" pag29
"9.8" pag29
"9.9" pag29
"12.3" pag30

The manufacturer guarantees only English text available on our web site www.isoil.com

(POS. 7.3-4) ***Current output option and range*** **[Out mA1/2=X_XX XXX]** ***AL3*** **[AO1CF] [AO2CF]**

This function sets the current output 1 and 2. This function is optional and will not appear unless the option has been requested. There are three fields to modify for this function:

- ❑ Scale zero: 4 or 0mA
- ❑ Full scale: 20 or 22mA
- ❑ Field: + = positive, - = negative, blank = both, -0+ = central zero scale

The values corresponding to the scale points are shown in the following chart:

CURRENT VALUES IN mA ASSOCIATE TO THE % FULL SCALE VALUE					
POSSIBLE FIELD	**REVERSE FLOW VALUE**		**ZERO**	**DIRECT FLOW VALUE**	
	≤-210%	-100%	0%	+100%	≥+210%
Out.mA = 0 ÷ 20 +	0	0	0	20	20
Out.mA = 0 ÷ 22 +	0	0	0	20	22
Out.mA = 4 ÷ 20 +	4	4	4	20	20
*Out.mA = 4 ÷ 22 +	4	4	4	20	21.6
Out.mA = 0 ÷ 20 -	20	20	0	0	0
Out.mA = 0 ÷ 22 -	22	20	0	0	0
Out.mA = 4 ÷ 20 -	20	20	4	4	4
Out.mA = 4 ÷ 22 -	21.6	20	4	4	4
Out.mA = 0 ÷ 20	20	20	0	20	20
Out.mA = 0 ÷ 22	22	20	0	20	22
Out.mA = 4 ÷ 20	20	20	4	20	20
Out.mA = 4 ÷ 22	21.6	20	4	20	21.6
Out.mA = 0 ÷ 20 –0+	0	0	10	20	20
Out.mA = 0 ÷ 22 –0+	0	1	11	21	22
**Out.mA = 4 ÷ 20 –0+	4	4	12	20	20
Out.mA = 4 ÷ 22 –0+	2	4	12	20	22

In hardware alarm conditions "HARDW AL." (interrupted coils, empty pipe, measure error) the current value is programmed by the function "mA v.fault" (pos. 5.6) and it is expressed as percentage of a fixed current range, where: 0% = 0mA and 210% = 22mA.

* Example 1: out 4-22 +

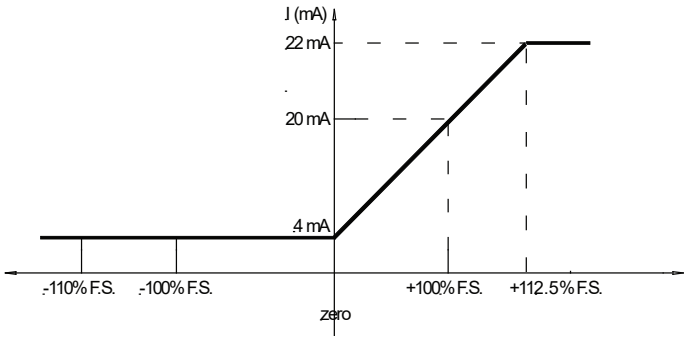

** Example 2: out 4-20 –0+

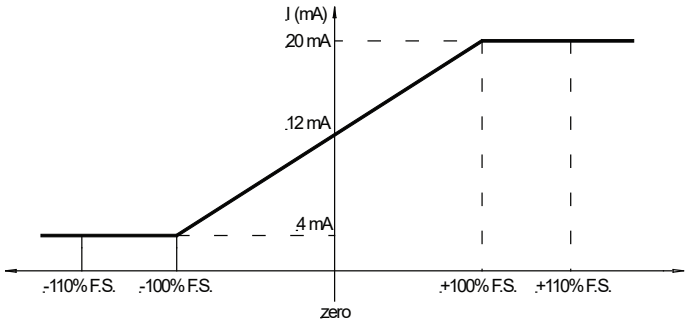

(POS. 7.5) Analog Output1 full scale [A1S= dm/s x.xxxx] *AL3* [AO1FS]

It allows to set the full scale value for analog output 1 **independently** from the main scale of the instrument.

(POS. 7.6) Analog Output2 full scale [A2S= dm/s x.xxxx] *AL3* [AO2FS]

It allows to set the full scale value for analog output 2 **independently** from the main scale of the instrument.

The manufacturer guarantees only English text available on our web site www.isoil.com

MENU 8 - COMMUNICATION

(POS. 8.1) ***Hart Preamble***	**[HART pr.=XXXXXX]**	***AL3***	**[HARTP]**

Number of preamble (Hart function)

(POS. 8.2) ***Hart O.C***	**[HART O.C=ON/OFF]**	***AL3***	**[HRTOC]**

Hart bus output control 4-20mA.

(POS. 8.3) ***Device Address***	**[Dev. Addr=XXXXXX]**	***AL3***	**[DVADD]**

Device communication address number.

(POS. 8.4) ***Modbus Speed***	**[Speed=XXXXXX]**	***AL3***	**[MDBSP]**

Modbus link speed.

(POS. 8.5) ***Modbus Parity***	**[Parity=XXXXXX]**	***AL3***	**[MDBPA]**

Modbus link parity.

(POS. 8.6) ***Modbus Delay***	**[Delay=XXXXXX]**	***AL3***	**[MDBDL]**

Modbus replay delay.

(POS. 8.7) ***Modbus chars Timeout***	**[C. timeout=X]**	***AL3***	**[MDBCT]**

Maximun delay between chars (frames).

MV210 MODBUS PROTOCOL

❑ RS485 HARDWARE CONNECTION

For the hardware connection see the relative section in this manual and MODBUS manual.

❑ DATA WORD FORMAT

The data bytes travelling in serial form on the communication line are enclosed in words which have a fixed length of 10 bits:
1 START BIT
8 DATA BITS = 1 DATA BYTE
1 STOP BIT
Each word contains one byte of data plus additional bits which serve to synchronies and make the communication safer. These extra bits added automatically in the transmission phase by the transmitter integrated circuit. In the reception phase, the reverse operation is executed by the receiver integrated circuit: the eight data bits are extracted and the others eliminated. These operation are executed entirely on a hardware level. The 8 data bits must be serialised staring from bit 0 (the least significant one).

❑ COMMUNICATION SPEED

The millennium series instruments have 4 communication speeds:
4800 bps
9600 bps
19200 bps
38400 bps

The manufacturer guarantees only English text available on our web site www.isoil.com

❑ SERIAL PORT SETTINGS

Serial port setting:
Data bits: 8
Parity: Manu < 7-Comunication >, function - < Parity >
Stop bits: 1
Flow control: none (no control lines no xon/xoff characters used)

❑ GENERAL DESCRIPTION

All data are sent in group of 16 bits registers. The format used is BIG ENDIAN, MSB byte is sent first, LSB is sent last. When a variable is more than 16 bits in size, it uses two adjacent registers. The totalizer values are expressed as integer numbers. For the correct representation of the value in case there is a fractional part, the decimal dot must be placed in the position specified by the next variable register following the totalized value. All values relative to the flow rate are averaged. The number of samples that compose the average value varies depending on the measure sample rate and the MODBUS reading requests. Example: measure sample rate = 50 Hz, MODBUS reading frequency = 10 Hz, Number of samples used for average calculation = 50/10 = 5.

Read process variable : COMMAND 04.

ADDRESS	SIZE	TYPE OF DATA	MEANING
0000-0001	2 REGISTERS 32 BITS	FLOAT	full scale flow rate in the unit of measure chosen (as can be seen in the display of the instrument)
0002-0003	2 REGISTERS 32 BIT	FLOAT	flow rate value in percentage
0004-0005	2 REGISTERS 32 BITS	FLOAT	flow rate value in the unit of measure chosen
0006-0007	2 REGISTERS 32 BITS	FLOAT	Flow speed in the unit of measure chosen (m/s or ft/s)
0008-0009	2 REGISTERS 32 BITS	UNSIGNED LONG	Totalizer T+ value
0010	1 REGISTER 8+8 BITS	TWO BYTES	First byte (MSB): number of overflows recorded, second byte (LSB): number of decimal places
0011-0012	2 REGISTERS 32 BITS	UNSIGNED LONG	Totalizer P+ value
0013	1 REGISTER 8+8 BITS	TWO BYTES	First byte (MSB): number of overflows recorded, second byte (LSB): number of decimal places
0014-0015	2 REGISTERS 32 BITS	UNSIGNED LONG	totalizer T- value
0016	1 REGISTER 8+8 BITS	TWO BYTES	First byte (MSB): number of overflows recorded, second byte (LSB): number of decimal places
0017-0018	2 REGISTERS 32 BITS	UNSIGNED LONG	Totalizer P- value
0019	1 REGISTER 8+8 BITS	TWO BYTES	First byte (MSB): number of overflows recorded, second byte (LSB): number of decimal places
0020	1 REGISTER 8+8 BITS	TWO BYTES	first byte (MSB): process flags 1, (LSB): process flags 2
0021	1 REGISTER 16 BITS	UNSIGNED SHORT	Number of measure samples used for to calculate the latest read average value of flow rate
0022	1 REGISTER 16 BITS	UNSIGNED SHORT	Equivalent resistance measured between electrode E1 and the common point, in kilo ohm
0023	1 REGISTER, 16 BITS	UNSIGNED SHORT	equivalent resistance measured between electrode E2 and the common point, in kilo ohm
0024	1 REGISTER, 16 BITS	SIGNED SHORT	voltage measured between electrode E1 and the common point, in millVolts
0025	1 REGISTER, 16 BITS	SIGNED SHORT	voltage measured between electrode E2 and the common point, in millVolts
0026	1 REGISTER, 16 BITS	UNSIGNED SHORT	voltage measured at rechargeable terminals, in milliVolts
0027	1 REGISTER, 16 BITS	UNSIGNED SHORT	residual battery capacity in percentage
0028	1 REGISTER, 16 BITS	SIGNED SHORT	CPU temperature in the unit of measure chosen
0029	1 REGISTER, 16 BITS	SIGNED SHORT	Board temperature T1 the unit of measure chosen
0030	1 REGISTER, 16 BITS	SIGNED SHORT	Board temperature T2 the unit of measure chosen
0031	1 REGISTER, 16 BITS	SIGNED SHORT	Flow sensor coil's temperature the unit of measure chosen
0032	1 REGISTER, 16 BITS	UNSIGNED SHORT	latest sensor test result code
0033	1 REGISTER, 16 BITS	UNSIGNED SHORT	number of alarms currently active

Meaning and value of the process flags 1 returned with the register 0020 (MSB):

- ❑ bit 7 (MSB): flow rate alarm MIN (flow rate below the minimum threshold set)
- ❑ bit 6: flow rate alarm MAX (flow rate over the maximum threshold set)
- ❑ bit 5: flow rate sign (1 = negative)
- ❑ bit 4: flow rate below the cut-off value
- ❑ bit 3: measure range active (0= range 1, 1= range 2)
- ❑ bit 2: flow rate measure reset value status (1= measure is forcibly reset to zero)
- ❑ bit 1: volume counters lock status (1= counters are locked)
- ❑ bit 0 (LSB) : internal use, no meaning

The manufacturer guarantees only English text available on our web site www.isoil.com

Meaning and value of the process flags 2 returned with the register 0020 (LSB):

- ❑ bit 7 (MSB): flow rate overflow (value greater than full scale)
- ❑ bit 6: pulse channel #2 overflow (frequency greater than maximum possible for the given parameters)
- ❑ bit 5: pulse channel #1 overflow (frequency greater than maximum possible for the given parameters)
- ❑ bit 4: measure signal amplitude out of A/D converter range
- ❑ bit 3: measure signal amplitude out of amplifier capability
- ❑ bit 2: input signal error (out of input chain capability)
- ❑ bit 1: coils excitation error
- ❑ bit 0 (LSB) : pipe empty

Meaning and value of the sensor test flags returned with the register 0032:

- ❑ bit 15 (MSB): resistance at electrode E2 is outside the limits respect to the reference value
- ❑ bit 14 : resistance at electrode E1 is outside the limits respect to the reference value
- ❑ bit 13: coil time B is outside the limits respect to the reference value
- ❑ bit 12: coil time A is outside the limits respect to the reference value
- ❑ bit 11: coil temperature is outside the limits respect to the reference value
- ❑ bit 10: coil leakage current is outside the limit
- ❑ bit 09: coil driver output 2 voltage is out of tolerance during test phase 3
- ❑ bit 08: coil driver output 1 voltage is out of tolerance during test phase 3
- ❑ bit 07: coil driver output 2 voltage is out of tolerance during test phase 2
- ❑ bit 06: coil driver output 1 voltage is out of tolerance during test phase 2
- ❑ bit 05: coil driver output 2 voltage is out of tolerance during test phase 1
- ❑ bit 04: coil driver output 1 voltage is out of tolerance during test phase 1
- ❑ bit 03: coil driver power generator voltage is out of tolerance during test phase 2
- ❑ bit 02: coil driver power generator voltage is out of tolerance during test phase 1
- ❑ bit 01: coil driver power generator value is out of tolerance during test phase 2
- ❑ bit 00 (LSB): coil driver power generator value is out of tolerance during test phase 1

The manufacturer guarantees only English text available on our web site www.isoil.com

Reset totalizers: COMMAND 05.

ADDRESS	SIZE	TYPE OF DATA	COMMAND VALUE	MEANING
0000	1 REGISTER, 16 BITS	UNSIGNED SHORT	0XFF00 (HEX)	Reset the enabled totalizers (same totalizer enabled for reset from digital input).

Diagnostics: COMMAND 08.

ADDRESS	SIZE	TYPE OF DATA	FUNCTION / VALUE
0000	1 REGISTER, 16 BITS	UNSIGNED SHORT	Return query data
0001	1 REGISTER, 16 BITS	SIGNED SHORT	Restart communication
0004	1 REGISTER, 16 BITS	SIGNED SHORT	Activate listen mode
0010	1 REGISTER, 16 BITS	SIGNED SHORT	Clear counters and Diagnostic Register

ADDRESS	SIZE	TYPE OF DATA	FUNCTION / VALUE
0011	1 REGISTER, 16 BITS	UNSIGNED SHORT	Return Bus Message Count
0012	1 REGISTER, 16 BITS	UNSIGNED SHORT	Return Bus Communication Error Count
0013	1 REGISTER, 16 BITS	UNSIGNED SHORT	Return Bus Exception Error Count with CRC error
0014	1 REGISTER, 16 BITS	UNSIGNED SHORT	Return Server Message Count
0015	1 REGISTER, 16 BITS	UNSIGNED SHORT	Return Server No Response Count
0016	1 REGISTER, 16 BITS	UNSIGNED SHORT	Return Server NAK Count
0017	1 REGISTER, 16 BITS	UNSIGNED SHORT	Return Server Busy Count
0018	1 REGISTER, 16 BITS	UNSIGNED SHORT	Return Bus Character Overrun Count

MENU 9 - DISPLAY

(POS. 9.1) ***Language for all msn*** **[Language= ITA/EN]** ***AL1*** **[LLANG]**

Choice of the language. There are 8 languages available: **GB** = English, **IT** = Italian, **TR** = Turkish, **PL** = Polish, **DE** = German, **FR** = French, **PT** = Portuguese, **ES** = Spanish.

(POS. 9.2) ***Display Contrast*** **[Contrast= x]** ***AL1*** **[DCNTR]**

Display contrast set. The contrast can change according to the room temperature. The allowed range is from 0 to 9.

(POS. 9.3) ***KeyBoard Timeout Time*** **[Disp. time=s xxx]** ***AL1*** **[KBTMT]**

This function set dispay/keyboard inactivity. The set values are from 020 to 255 second.

(POS. 9.4) ***Display refresh Frequency*** **[D.rate=Hz xx]** ***AL1*** **[DISRF]**

Frequency of the display data update. This parameter effects only the display layout and not the response time of the meter itself. The possible choices are: 1/2/5/10 Hz.

(POS. 9.5) ***Display function number*** **[Disp.fn= x]** ***AL2*** **[DISFN]**

This function sets the display of the page making it visible when you start the display. For each display page is associated with a number that corresponds to the position.

(POS. 9.6) ***Display function lock*** **[Disp.lock= x]** ***AL2*** **[DLOKE]**

This function locks the scrolling of the display pages selected by the setting. POS. 9.5 see page 29 function.

(POS. 9.7) ***Partial totalizer*** **[Part. tot= ON]** ***AL2*** **[PTOTE]**

This function enables the display of partial totalizer in visualization pages

(POS. 9.8) ***Negative totalizer*** **[Neg. tot= ON]** ***AL2*** **[NEGTE]**

This function enables the display of negative totalizer in visualization pages

(POS. 9.9) ***Net totalizer*** **[Net. tot= ON]** ***AL2*** **[NVTTE]**

This function enables the display of net totalizer in visualization pages

(POS. 9.10) ***Date and Time*** **[Disp.Date= ON]** ***AL2*** **[DATDE]**

This function enables the display of date and time in visualization pages

(POS. 9.11) ***Quick start menu*** **[Quick start= ON]** ***AL2*** **[QSTME]**

This function enables the quick start menu.

The manufacturer guarantees only English text available on our web site www.isoil.com

MENU 10 - DATA LOGGER

(POS. 10.1) ***Data logger enable*** **[D.logger en= /OFF]** ***AL3*** **[DLOGE]**

This function enables data loger.

The following functions are activated by [D.loger en= ON]

(POS. 10.2) Unite of *Measure* **[Meas. units= ON]** ***AL3*** **[DLUME]**

Measure unit recording enable

(POS. 10.3) ***Field separator character*** **[Field separ.= ;]** ***AL3*** **[DLFSC]**

This function will set the separator character between data logger data.

(POS. 10.4) ***Decimal Separator Char.*** **[Decim.separ.= .]** ***AL3*** **[DLDSC]**

This function will set the separator character between data logger number value.

(POS. 10.5) Sample *Interval* **[Interv.= xx:xx:xx]** ***AL3*** **[DLGSI]**

Sampling interval. This function set the log frequency. [Interv.= Hours : Minutes: Seconds]

(POS. 10.6) ***Total direct totalizer*** **[Log T+= ON]** ***AL3*** **[DTTPE]**

Enable logging of total direct totalizer.

(POS. 10.7) ***Partial direct totalizer*** **[Log P+= ON]** ***AL3*** **[DTPPE]**

Enable logging of partial direct totalizer.

(POS. 10.8) ***Total reverse totalizer*** **[Log T-= ON]** ***AL3*** **[DTTNE]**

Enable logging of total reverse totalizer

(POS. 10.9) ***Partial reverse totalizer*** **[Log P-= ON]** ***AL3*** **[DTPNE]**

Enable logging of partial reverse totalizer

(POS. 10.10) ***Total Net totalizer*** **[Log TN= ON]** ***AL3*** **[DLTNE]**

Enable logging of total net totalizer

(POS. 10.11) ***Partial Net totalizer*** **[Log PN= ON]** ***AL3*** **[DLPNE]**

Enable logging of partial net totalizer

(POS. 10.12) ***Log Flow rate in measure unit*** **[Log Q(UM)= ON]** ***AL3*** **[DFTUE]**

Enable logging of flow rate in measure unit

(POS. 10.13) ***Log Flow rate in percentage*** **[Log Q(%)= ON]** ***AL3*** **[DFPCE]**

Enable recording of the flow rate as a percentage of full scale value set.

(POS. 10.14) ***Alarm events*** **[Log AL.EV= ON]** ***AL3*** **[DALEE]**

Enable logging of alarm events

The manufacturer guarantees only English text available on our web site www.isoil.com

(POS. 10.15) ***Sensor test result***	**[Log STR= ON]**	***AL6***	**[DSTRE]**

Enable logging of sensor test results

(POS. 10.16) ***Board temperatures***	**[Log BTS= ON]**	***AL6***	**[DBTSE]**

Enable logging of board temperature

(POS. 10.17) ***Internal board voltages***	**[Log IBV= ON]**	***AL6***	**[DIBVE]**

Enable logging of internal board voltage

(POS. 10.18) ***Electrodes DC voltages***	**[Log EDC= ON]**	***AL6***	**[DEDVE]**

Enable logging of electrodes DC voltage

(POS. 10.19) ***Electrodes AC voltages***	**[Log AEC= ON]**	***AL6***	**[DEAVE]**

Enable logging of electrodes AC voltage

(POS. 10.20) ***Electrodes source impedance***	**[Log EIZ= ON]**	***AL6***	**[DESIE]**

Enable logging of electrodes impedance

(POS. 10.21) ***Sensor coils values***	**[Log SCV= ON]**	***AL6***	**[DSCVE]**

Enable logging of sensor coils value

MENU 10 - DATA LOGGER: ONLY MCP FUNCTIONS

LoG All Information Enable	**[MCP ONLY]**	***AL6***	**[LGAIE]**

Log all events information. This function save in the event file all MCP commands.

The manufacturer guarantees only English text available on our web site www.isoil.com

USING DATA LOGGER BY MCP INTERFACE

Data are stored on micro SD card; the organization is based on "tree-structure": the system create a daily folder where it save events and data logger . The data can be downloaded by MCP interface.

MCP INTERFACE

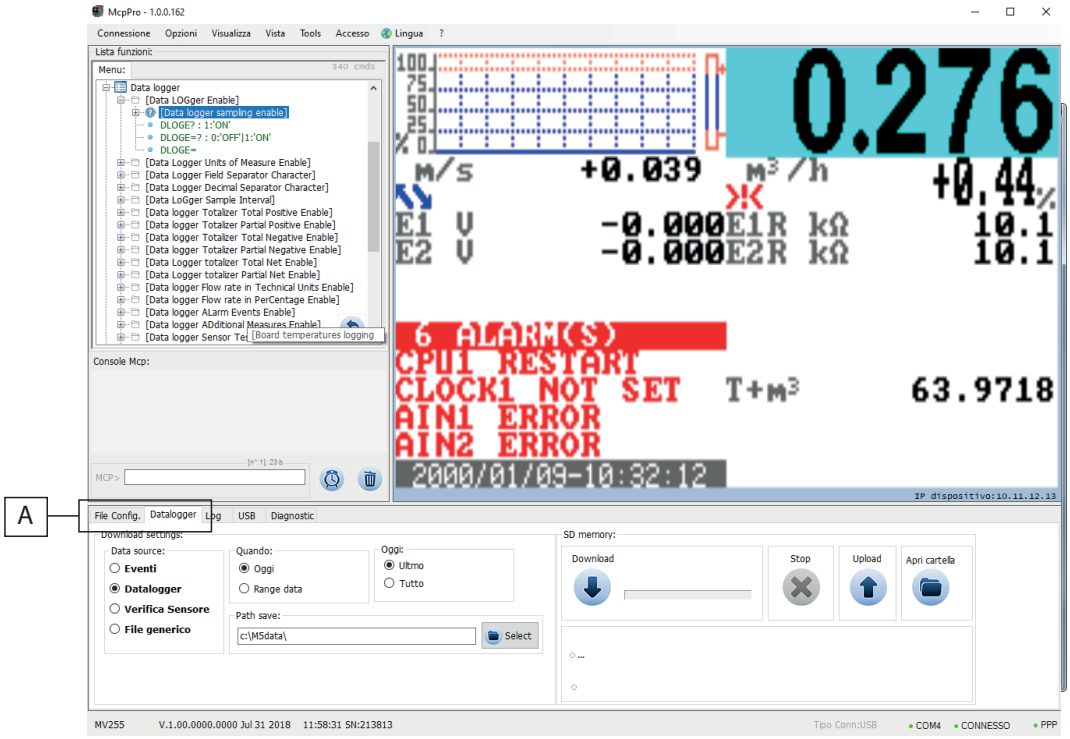

Click tab-control data logger to view files.
The sampling data backup depends on the value set by the POS function 10.4 page 25.

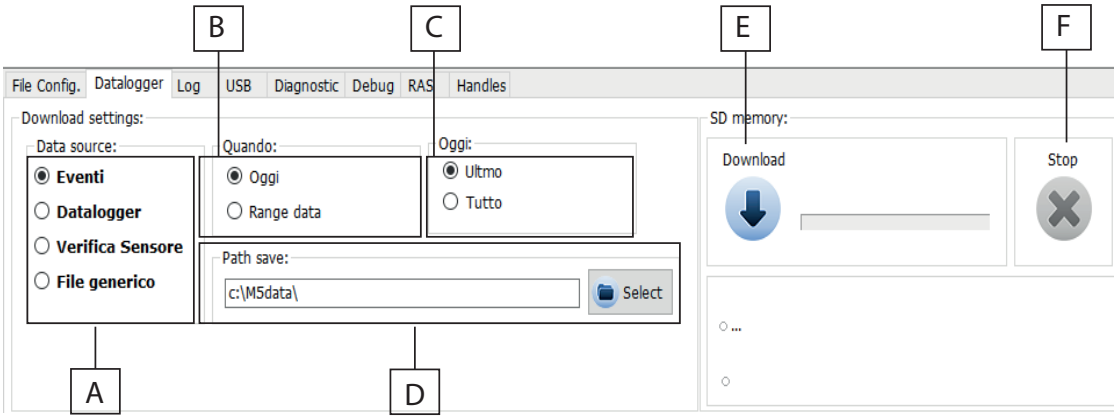

A=Data source

Events: Save the file system events (Example F-RAM hardware data [WORKING AREA] [SUCCESSFULLY LOADED])
Data logger: Save files of the enabled data logger function.
Sensor Verify: data logged by BIV function
Generic file:

B=When

Today; It indicates the download file for the current day
Data range; this option allows you to select the date range for download.

The manufacturer guarantees only English text available on our web site www.isoil.com

C=Today
Last; this option allows to download the latest files, recordered after the laat download
All; this option allows the download of all the current day of the file

D=Save path:
This option allows you to save files to the folder on your PC

E=Download:
Button to start the download process

F=Stop:
Button to stop the download process

Example: Download Events

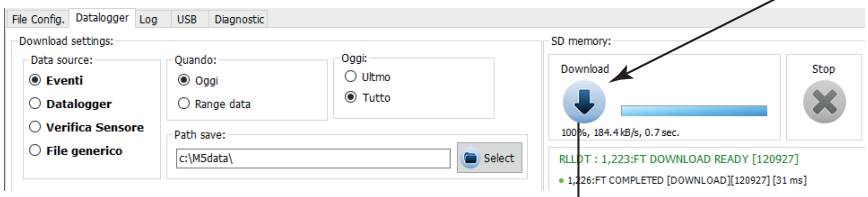

Per scaricare tutti gli eventi del giorno odierno in una cartella specifica, settare i seguenti parametri come segue:
Data source: Eventi
Quando: Oggi
Oggi: Tutti
Save path: C:/.....
Impostati i parametri cliccare il tasto Download.

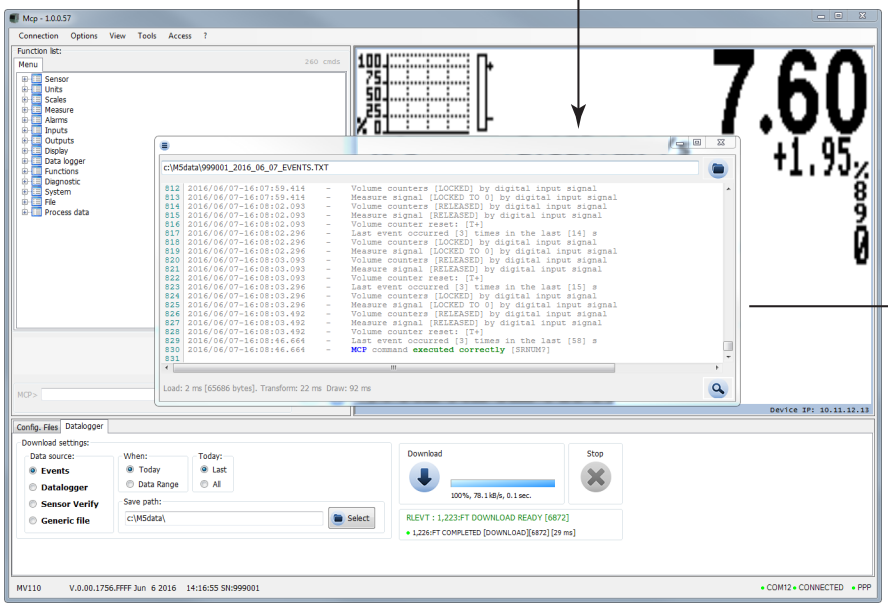

Terminato il Download, viene visualizzata una finestra contenente la lista degli eventi in data odierna. Il file viene salvato in formato txt nella cartella specificata per il download.

Example: Download Data Logger

Note: it is recommended the date synchronization between converter and PC to perform correctly the events and logger reading operations.

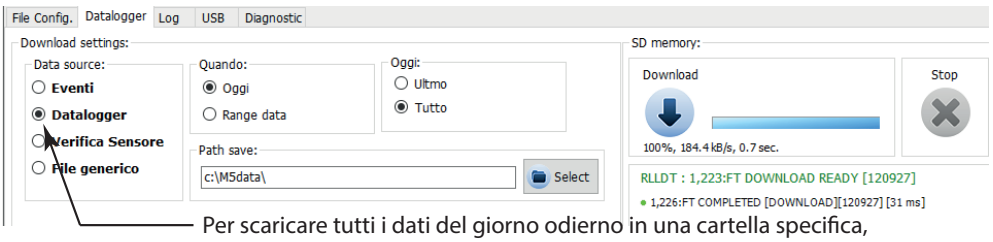

Per scaricare tutti i dati del giorno odierno in una cartella specifica, settare i seguenti parametri come segue:
Data source: Datalogger
Quando: Oggi
Oggi: Tutti
Save path: C:/.....
Impostati i parametri premere il tasto Download.

The manufacturer guarantees only English text available on our web site www.isoil.com

View downloaded files setting download data logger.
Note: The fields are in a fixed position, regardless if the above fields are active or not. The disabled fields are empty (delimited by the separator but without data).

N°Record. View progressively the number of registered records.	
Date. The recording date viewing for each record.	
Hours. Time recording viewing for each record.	
Total positive totalizer value. Form Fields when the send flag is active on the totalizer T+.	
Partial positive totalizer value. Form Fields when the send flag is active on the totalizer P-.	
Total negative totalizer value. Form Fields when the send flag is active on the totalizer T-.	
Partial negative totalizer value. Form Fields when the send flag is active on the totalizer P-.	
Total net totalizer value. Form Fields when the send flag is active on the totalizer TN.	
Partial net totalizer value. Form Fields when the send flag is active on the totalizer PN	
Flow rate. Form Fields present when the send flag is on the flow in units of measurement.	
Flow rate %. Form fields present when the flag of alarm recording is active (only N ° of present total alarms)	
N ° active alarms. Form fields present when the flag of alarm recording is active (only N ° of present total alarms)	
Loss of current measured during insulation test. Available value when recording the sensor test data is active.	
Time rise A. Available value when recording the sensor test data is active.	
Time rise B. Available value when recording the sensor test data is active.	
Sensor test error code. Available value when recording the sensor test data is active.	

	A	B	C	D	E	F	G	H	I	J	K	L	M	N	O	P	Q	R	S	T	U	V	W	X	Y	Z	AA	AB	AC
1	N.RECORD	DATE	HOURS	U.M.	T+	U.M.	P+	U.M.	T-	U.M.	P-	U.M.	TN	U.M.	PN	U.M.	FLOWRATE	U.M.	FLOWRATE %	U.M.	N.ACTIVE ALARM	U.M.	CPTI	U.M.	TRISE A	U.M.	TRISE B	U.M.	CETS
2	n°	dd/mm/yy	00:00:00	dm3	0	dm3	0	dm3	0	dm3	0	dm3	0	dm3	0	dm3/s	0	%	0	AL	0	mA	0	ms	0	ms	0	ERR	0

Visualization of downloaded file. Access Level 2 (diagnostic level) is required in order to download this type of file.

The manufacturer guarantees only English text available on our web site www.isoil.com

	AD	AE	AF	AG	AH	AI	AJ	AK	AL	AM	AN	AO	AP	AQ	AR	AS	AT	AU	AV	AW	AX	AY	AZ	BA	BB	BC	BD	BE	BF	BG	BH	BI	BJ	BK	BL	BM	BN	BO	BP	BQ	BR	BS	BT	BU
	U.M.	E1 V	U.M.	E2 V	U.M.	VD (E1-E2)	U.M.	VC (E1+E2)/2	U.M.	CM LF NOISE	U.M.	DIF LF NOISE	U.M.	ADC LF NOISE	U.M.	ADC HF NOISE	U.M.	E1 R	U.M.	E2 R	U.M.	EXCITATION CUR	U.M.	R COILS	U.M.	T COILS	U.M.	T1	U.M.	T2	U.M.	T CPU	U.M.	V CPU	U.M.	AVCC+	U.M.	AVCC-	U.M.	BATT1 V	U.M.	BATT2 V	U.M.	% BATTERY CHARGE
Voltage measured on electrode E1. Form fields when is active the recording of data on the input voltage (diagnostic value).	V	0																																									
Voltage measured on electrode E2. Form fields when is active the recording of data on the input voltage (diagnostic value).			V	-0.023																																							
Differential voltage between the two electrodes. FForm fields when is active the recording of data on the input voltage (diagnostic value)					V	0																																					
Common mode voltage in the electrodes. Form fields when is active the recording of data on the input voltage (diagnostic value).							V	0																																			
Noise at low frequency measured on the electrodes. FForm fields when is active the recording of data on the input signal noise levels (diagnostic value).									V	0																																	
Differential low frequency noise measured on the electrodes. Form fields when is active the recording of data on the input signal noise levels (diagnostic values).											V	0																															
Low-frequency noise measured input ADC. Form fields when is active the recording of data on the input signal noise levels (diagnostic values).													mV	0																													
High frequency noise measured input ADC. Form fields when is active the recording of data on the input signal noise levels (diagnostic values).															mV	0																											
Measured equivalent resistance on the electrode 1. Form fields when is active the recording of data on the electrode resistance measurements (diagnostic values).																	kohm	0																									
Measured equivalent resistance on the electrode 2. Form fields when is active the recording of data on the electrode resistance measurements (diagnostic values).																			kohm	0																							
Coils excitation current. Form fields when is active the recording of data related to the sensor excitation circuit measures (diagnostic value)																					mA	0																					
Measured resistance of the excitation circuit (coil + cable). Form fields when is active the recording of data relative to the sensor excitation circuit measures (diagnostic values).																							ohm	0																			
Temperature measured on the sensor coils (indirect measurement). Form fields when the data transmission flag is active relative to the sensor excitation circuit measures (diagnostic values).																									°C	0																	
Temperature T1 (sheet sensor 1). Form fields when the data transmission flag on board the internal temperature measurement is active (diagnostic values).																											°C	0															
Temperature T2 (sheet sensor 2). Form fields when the data transmission flag on board the internal temperature measurement is active (diagnostic values).																													°C	0													
CPU temperature. Form fields when the data on the card's internal power supply voltage measurements flag is ON (diagnostic value).																															°C	0										
Primary power supply of CPU. Form fields when the data on the card's internal power supply voltage measurements flag is ON (diagnostic value).																																	V	0								
Positive supply voltage of analog circuits. Form fields when the data on the card's internal power supply voltage measurements flag is ON (diagnostic values).																																			V	0						
Negative supply voltage of the analog circuits. Form fields when the data on the card's internal power supply voltage measurements flag is ON (diagnostic values).																																					V	0				
Voltage measured on the battery B1 (NOT rechargeable battery). Fields when the data on the card's internal power supply voltage measurements flag is ON (diagnostic values).																																									
Voltage measured on the battery B2 (or rechargeable battery). Form fields when the data on the card's internal power supply voltage measurements flag is ON (diagnostic values).																																							V	0		
% Battery charge. Form fields when the data on the card's internal power supply voltage measurements flag is ON (diagnostic values).																																									%	0

The manufacturer guarantees only English text available on our web site www.isoil.com

Example: Sensor Verify

The function "Sensor Verify" creates the "STESTLOG.CSV" file, according to the following conditions:
1) Activate the SDC / RTC option in group "HW Config" (by factory see the order code)
2) Activate the "BIV" in the group "PRODUCT CODE" (by factory see the order code)
3) Activate the "Sens.verify" function in the "Sensor" menu
Activated such conditions, the converter will perform every hour a measure of sensor's parameters and record a line of the file "STESTLOG.CSV"; it is possible even a manual verification by the command "sens.verify" on the menu "Diagnostic" or through the MCP command "SVERC".

Per scaricare tutte le verifiche sensore del giorno odierno in una cartella specifica, settare i seguenti parametri come segue:
Data source: Verifica sensore
Quando: Oggi
Oggi: tutti
Save path: C:/.....
Impostati i parametri premere il tasto Download.

Example: Generic File

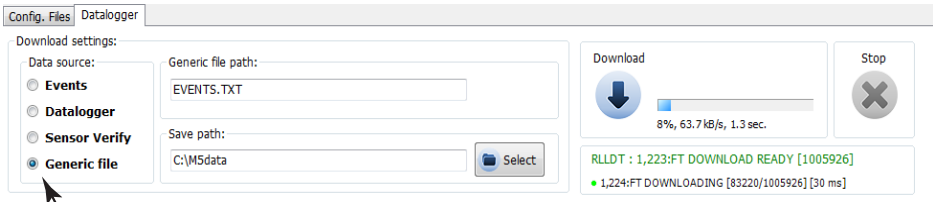

Questa Funzione permette di selezionare un file contenuto nella memoria SD del convertitore e scaricarlo.
Nella sezione "Generic file path" indicare il nome del file contenuto nella SD e indicare in "Save path" il percorso di salvataggio del file stesso. Impostati tali valori procedere con il download del file cliccando sul tasto "download ".

The manufacturer guarantees only English text available on our web site www.isoil.com

MENU 11 - FUNCTION

The following functions are activated by first pressing the "ENTER" and then the "ESC" when the screen appears "confirm" to start the function.

(POS. 11.1) ***Total direct totalizer reset*** **[T+ RESET= ON]** ***AL3*** **[VTTPR]**

Reset total direct totalizer for direct flow rate (+)

(POS. 11.2) ***Partial direct totalizer reset*** **[P+ RESET= ON]** ***AL3*** **[VTPPR]**

Reset total partial totalizer for direct flow rate (+)

(POS. 11.3) ***Total reverse totalizer reset*** **[T- RESET= ON]** ***AL3*** **[VTTNR]**

Reset total reverse totalizer for direct flow rate (-)

(POS. 11.4) ***Partial reverse totalizer reset*** **[P- RESET= ON]** ***AL3*** **[VTPNR]**

Reset partial reverse totalizer for direct flow rate (-)

(POS. 11.5) ***Load factory default sensor*** **[Load sens.f.def= ON]** ***AL3*** **[LFDSD]**

This function resets the parameters of the sensor factory default. To Load the saved files see function (11.7).

(POS. 11.6) ***Load factory default converter*** **[Load conv.f.def= ON]** ***AL3*** **[LFDCD]**

This function resets the parameters of the converter factory default. o Load the saved files see function (11.8).

(POS. 11.7) ***Save sensor factory default*** **[Save sens.f.def= ON]** ***AL6*** **[SFDSD]**

This function save the parameters of the sensor factory default.

(POS. 11.8) ***Save convert factory default*** **[Save conv.f.def= ON]** ***AL6*** **[SFDCD]**

This function loads the data from a converter to another.

(POS. 11.9) ***Calibration Immediate*** **[Calibration]** ***AL5*** **[CALIC]**

Perform manually a board's calibration. Press Enter and the message " EXECUTE?" will be visualized on the display then press long the key Enter to proceed. Press any other key to delete the operation.
If the sensor table is valid, the calibration is performed also when one of the following paramenter has been change:

1. SENSOR DIAMETER -> Menu Sensor1
2. SENSOR MODEL -> Menu Sensor1
3. Exc. CURRENT -> Menu Sensor1
4. S. Freq. -> Menu Sensor1

To check the calibration status, active or inactive, type the command MCP Calic? and check as follows:

- ❑ CALIC = 1 calibration in progress
- ❑ CALIC = 0 calibration terminated

MENU 11 - FUNCTION: ONLY MCP FUNCTIONS

Save sensor reference data **[MCP ONLY]** ***AL4*** **[SRFDS]**

Save conv.f.def= ON. "meter data" page 75

The manufacturer guarantees only English text available on our web site www.isoil.com

MENU 12 - DIAGNOSTIC

(POS. 12.1) *Self Test Diagnostic* [Self Test] *AL3* [ATSIC]

Meter auto-test function. This function stops the normal functions of the meter and performs a complete test cycle on the measure input circuits and on the excitation generator. To activate this function, after select it, push key Enter, at the question: "CONFIRM EXEC.?" Long Push the same key to start auto-test, or any other key for delete operation. At the end of operation the converter will revert to one of the initial visualization pages. This function is automatically performed when switching on the device. This function restarts the converter.

(POS. 12.2) *Test display* [Test display] *AL1* NO MCP COMMAND

This function allows to do a physical test the graphic display. During this operation, 4 sequences are displayed to test the correct functioning of the device.

(POS. 12.3) *Sensor verify* [Sens. verify] *AL3* [SVERC]

This function perform a manual sensor verification (if BIV is active)

(POS. 12.4) *Flow rate simulation* [Flow sim=ON] *AL3* [MSIEN]

Flow rate simulation enabling. With this function it is possible to generate an internal signal that simulates the flow rate, allowing the outputs and all the connected instruments test. After enabling it, a '▲▼' appears in the top left of the screen and the flow rate simulation can be:

- ❑ set: by pushing the key Enter from one of visualization pages, to set the required % flow rate (Fl. rate=%) and the same key to confirm the value;
- ❑ finished: by pushing the key Enter from visualization pages and then by long pushing the same key.

(POS. 12.5) *Diagnostic measures* [Display measures] *AL5* DMVLS

This Function shows the values of the various internal parameters as listed below :

VCPU:V	5.01	LFN_COM:V	0.000
VPS:V	5.41	LFN_DIF:V	0.000
VUSB:V	4.53	HFN_ADC:mV	0.000
+AVCC:V	+10.1	LFN_ADC:mV	0.001
-AVCC:V	-9.9	MEAS_NB:	0
VBATT:V	0.000	CAL_I:mV	16.503
IBATT:A	0.000	CAL_U:mV	530.778
VIN1:V	-8.071	CAL_G:	32.1622
VIN2:V	-8.065	CAL_O:mA	-0.055
VIN_C:V	-8.068	CAL_C:mA	-0.055
VIN_D:V	-0.006	CAL_R0:	1.00000
C_C:mA	25.00	CAL_R1:	1.00000
C_V:V	5.0	CAL_R2:	1.00000
C_VPK:V	5.5	CAL_R3:	1.00000
C_R:Ω	201.9	SYS_F:MHz	50.0512
C_PWR:W	0.126	CURR_K:	0.00000
C_T:°C	--.-	PROC1:%	46.4
C_RT:ms	0.00	PROC2:%	7.3
C_LK:mA	0.000	PROC3:%	3.8
C_ST:	1	PROC4:%	29.8
S.VER.RSLT:	0000	PROC5:%	12.6
E1R:kΩ	0.0	CPU_T:°C	+33.12
E2R:kΩ	0.0		

(POS. 12.6) *Disp, comm. Diagnostic values* [Disp. comm. vars] *AL5* DCVLS

Create a list of diagnostic values on the instrument communication.

PPP link status →
MCPI socket status →

PPP_STATUS:	NETW	E_IP_HDR5:	3
MCPI_S:	ESTABLISH	E_IP_HDR6:	0
RxCNT:	1477149	E_IP_HDR7:	0
TxCNT:	6515456	E_IP_HDR8:	0
E_SR_LINK:	0	E_IP_HDR9:	0
E_PAKTLEN:	0	E_TCPHDR1:	0
E_NETLAYR:	0	E_TCPHDR2:	0
E_TSPLAYR:	0	E_UDPHDR1:	0
E_ARPHDR1:	0	E_UDPHDR2:	0
E_ARPHDR2:	0	E_UDPHDR3:	92
E_IP_HDR1:	0	E_ICMPHDR:	0
E_IP_HDR2:	0		
E_IP_HDR3:	0		
E_IP_HDR4:	0		

The manufacturer guarantees only English text available on our web site www.isoil.com

Following are the states for the PPP link and MCPI to connect the device.

PPP link status:

"UNDT" = undetermined
"DEAD" = dead, link down, persistent condition
"LCP" = LCP phase, transition condition
"AUTH" = Authentication phase, transition condition
"IPCP" = IP and DNS addressess assign phase, transition condition
"NETW" = network established (normal persistent condition when the link is UP)
"TERM" = link termination request, transition condition

MCPI link status:

"CLOSED" = socket closed
"ACCEPT" = socket awaiting for new connection
"ESTABLISH" = link established
"CLS_WAIT" = waiting for closure
"LAST_ACK" = lask ACK sent
"FIN_WAIT" = (see TCP/IP RFC documentation)
"TIME_WAIT" = (see TCP/IP RFC documentation)

The manufacturer guarantees only English text available on our web site www.isoil.com

(POS. 12.7) Display graphs [Display graphs] *AL5* NO MCP COMMAND

This function displays graphs of input Z, C. current, C. Volt, C.Load, Input 1, Input 2, Input1-Input 2, Analog to Digital Converter.

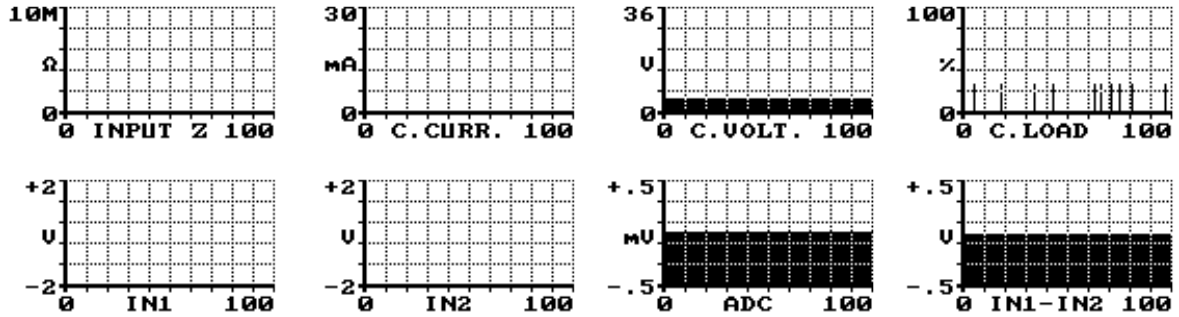

(POS. 12.8) Generic sensor set [Gen.sens. set] *AL5* NO MCP COMMAND

Automatic finding of a parameter set for a generic sensor.

(POS. 12.9) ***SD card status info.*** **[SD card info]** ***ALO*** **SDSTA**

This function shows the status of the SD card as shown in the following figure.

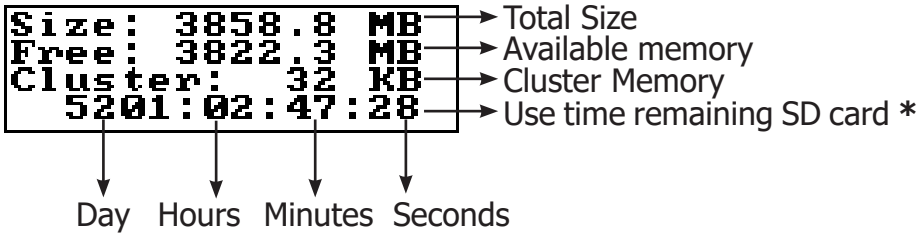

The statistical calculation is performed every time the command SDSTA is invoked. The statistical data are updated AUTOMATICALLY every day (24 hours) or manually each time the function is called to display or send the SDSTA command. However, given that for the detection is necessary a minimum of one hour, the data will not be recomputed before this time interval.

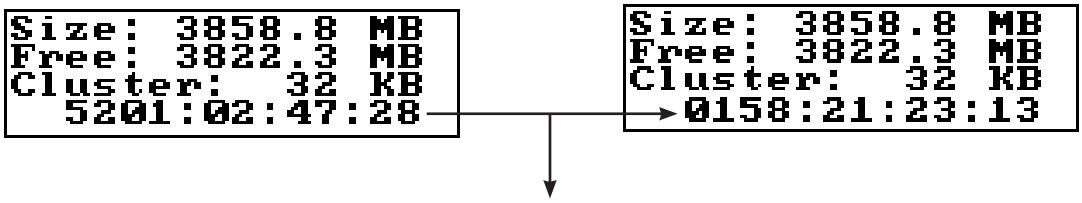

The SD card must be replaced only by the service. The use of commercial cards could disable some functionality of the instrument.

(POS. 12.10) ***Firmware info*** **[Firmware info]** ***ALO*** **MODSV**

Firmware info version/revision

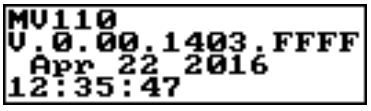

(POS. 12.11) ***Board Serial Number*** **[S/N= xxxxxx]** ***ALO*** **[SRNUM?]**

View Board serial number. (read only)

(POS. 12.12) ***Working Time*** **[WT= xxxx: xx: xx: xx]** ***ALO*** **[TWKTM?]**

View Total working time instrument. (read only)

The manufacturer guarantees only English text available on our web site www.isoil.com

MENU 13 - SYSTEM

(POS. 13.1) Daylight saving time **[Dayl. Saving= ON]** ***AL2*** **[DYSTE]**

Daylight saving time change.

(POS. 13.2) Time zone **[Time zone=h+xx.xx]** ***AL2*** **[TZONE]**

Set time for geographic area

(POS. 13.3) Date and Time **[xxxx/xx/xx-xx:xx]** ***AL2*** **[DTIME]**

Set to system date and time

(POS. 13.4-5-6-7-8-9) Access level n° code **[Ln xxxxxxxx]** ***---*** **[L1ACD]-> [L6ACD]**

This function enables or disables, for each access level code, the main menu functions.
Each level unlocks the functionality of the lower level. (Function 13.10 see page 31)

L1 code= ******** Access level value code 1 L4 code= ******** Access level value code 4
L2 code= ******** Access level value code 2 L5 code= ******** Access level value code 5
L3 code= ******** Access level value code 3 L6 code= ******** Access level value code 6

(POS. 13.10) Restricted access level **[Restr. access= ON]** ***AL6*** **[RSARE]**

Enable Or disable access level code. If active displays only the functions related to the level entered access.

IP ADDRESS SETTING (13.11-12-13)

(POS. 13.11)Device IP address **[XXX.XXX.XXX.XXX]** ***AL3*** **[DIPAD]**

Device IP network edress

(POS. 13.12) Client IP address **[XXX.XXX.XXX.XXX]** ***AL3*** **[CIPAD]**

Client IP network adress

(POS. 13.13) Network mask **[XXX.XXX.XXX.XXX]** ***AL3*** **[NETMS]**

Network mask.

Caution: Changes to the functions of the points 13.11-13.12-13.13 are enabled after the drive device restart (see function 12.1 Self test for restart converter).

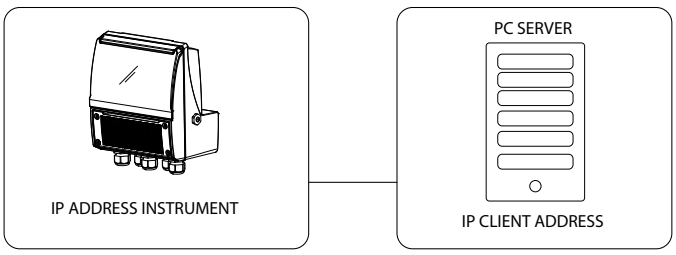

(POS. 13.14) Coefficient KT **[KF=X.XXXXX]** ***AL6*** **[CFFKT]**

Gain correction coefficient (calculated automatically)

(POS. 13.15) Coefficient KS **[KF=X.XXXXX]** ***AL5*** **[CFFKS]**

Correction coefficient constant instrumental

The manufacturer guarantees only English text available on our web site www.isoil.com

(POS. 13.16) Coefficient KR **[KR=X.XXXXX]** ***AL5*** **[CFFKR]**

Correction coefficient constant instrumental

DIGITAL ANALOG CONVERTER (Correction Parameters)(13.17-18-19-20)

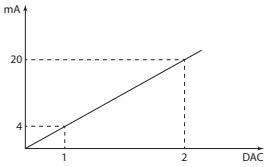

The diagram shows how the DAC4-20mA parameters are setup. The DAC1 value corresponds to 4 mA corresponding to a zero flow rate, while the value of 20mA corresponds to a 100% of the flow rate.

(POS. 13.17) DAC1 4mA **[DAC1 4mA =XXXXX]** ***AL5*** **[C1CP1]**

DAC1 out 4mA calibration point. (current output1 calibration point 1)

(POS. 13.18) DAC1 20mA **[DAC1 20mA=XXXXX]** ***AL5*** **[C1CP2]**

DAC1 out 20mA calibration point. (current output1 calibration point 2)

(POS. 13.19) DAC2 4mA **[DAC1 20mA=XXXXX]** ***AL5*** **[C2CP1]**

DAC2 out 4mA calibration point. (current output2 calibration point 1)

(POS. 13.20) DAC2 20mA **[DAC2 20mA=XXXXX]** ***AL5*** **[C2CP2]**

DAC2 out 20mA calibration point (current output2 calibration point 2)

(POS. 13.21) Stand-BY **[STAND-BY]** ***AL3*** **[SSTBY]**

Enable the converter standby state. It is enable by selecting chargeable battery in hw confing.

(POS. 13.22) Firmware Update **[FW update]** ***AL4*** **[FWUPD]**

Enable firmware update. The firmware can be upload to the SD card (name.file).
MCP interface is activated by the command FWUPD = name.file

The manufacturer guarantees only English text available on our web site www.isoil.com

MENU 13 - SYSTEM: ONLY MCP FUNCTIONS

Unique Identity KEY **[MCP ONLY]** ***AL0*** **[UIKEY]**

Device Unique Identity key

HardWare SET **[MCP ONLY]** ***AL0*** **[HWSET]**

Device hardware configuration

HardWare CODe **[MCP ONLY]** ***AL0*** **[HWCOD]**

Device hardware code

Calibr. Exec. status Memory **[MCP ONLY]** ***AL6*** **[CALXM]**

Calibration Execution status Memory. This function checks the instrument's internal calibration status.
CALXM=1 instrument calibrated correctly
CALXM=0 Invalid calibration / Calibration not completed (invalid calibration (if the function is zero, start the calibration function, MCP CALIC command).

RTC Real time clock **[MCP ONLY]** ***AL2*** **[RTCAC]**

RTC is used to set a correction factor for the internal clock.
For setting the correction date and time with MCP press

Function CODe Selection **[MCP ONLY]** ***AL0*** **[FCODS]**

Select the function code

FuNction Enable State Selection **[MCP ONLY]** ***AL6*** **[FNESS]**

Select the enable state of function

All FuNctions State Selection **[MCP ONLY]** ***AL6*** **[AFNSS]**

Select enable state of ALL function

Quick Start FuNction Selection **[MCP ONLY]** ***AL6*** **[QSFNS]**

Select function for quick start menu

Quick Start All Functions Selection **[MCP ONLY]** ***AL6*** **[QSAFS]**

Select ALL function converter for quick start menu.

Quick start function Status LiST **[MCP ONLY]** ***AL6*** **[QSLST]**

List quick start group functions

Function enable Status LiST **[MCP ONLY]** ***AL6*** **[FSLST]**

List enable status of functions

The manufacturer guarantees only English text available on our web site www.isoil.com

Access CODE	[MCP ONLY]	*ALO*	[ACODE]

Input the right access code

Exemple set quick start menù function for mcp.

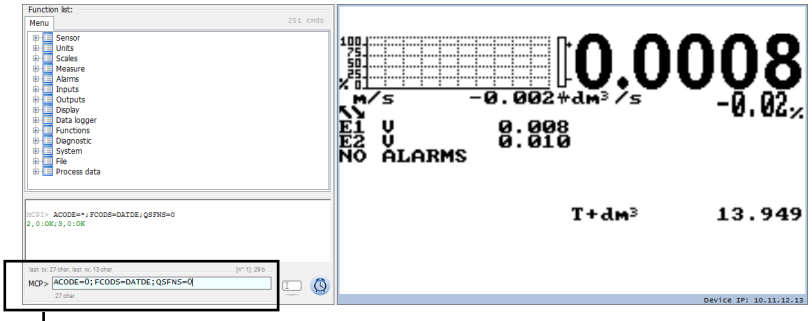

ACODE=0; FCODS=[MCP COMMAND]; QSFNS=1

- Access Code
- INSERT MCP Command of the function to be activated in the QS menu.
- Quick Start FuNction Selection

LINK Terminate	[MCP ONLY]	*ALO*	[LTERM]

Terminate the PPP data link

MCPI session QUIT	[MCP ONLY]	*ALO*	[MQUIT]

Quit the MCPI connection

Functions LIST	[MCP ONLY]	*ALO*	[FLIST]

View list of all available converter functions.

Functions LISt Compact	[MCP ONLY]	*ALO*	[FLISC]

View compact list of all available converter functions.

Functions Menu SELection	[MCP ONLY]	*ALO*	[FMSEL]

Select menu for functions list

ConFiguration LiST	[MCP ONLY]	*ALO*	[CFLST]

Configuration parameter list. The list with the status / values of the converter parameter.

Volume Totalizer Total Positive Set	[MCP ONLY]	*AL4*	[VTTPS]

Totaliz.T+ value set

Volume Totalizer Partial Positive Set	[MCP ONLY]	*AL4*	[VTPPS]

Totaliz.P+ value set

The manufacturer guarantees only English text available on our web site www.isoil.com

Volume Totalizer Total Negative Set **[MCP ONLY]** ***AL4*** **[VTTNS]**

Totaliz.T- value set

Volume Totalizer Partial Negative Set **[MCP ONLY]** ***AL4*** **[VTPNS]**

Totaliz.P- value set

Volume Total Positive Overflow Set **[MCP ONLY]** ***AL4*** **[VTPOS]**

Totaliz.T+ overflow value set

Volume Partial Positive Overflow Set **[MCP ONLY]** ***AL4*** **[VPPOS]**

Totaliz.P+ overflow value set

Volume Total Negative Overflow Set **[MCP ONLY]** ***AL4*** **[VTNOS]**

Totaliz.T- overflow value set

Volume Partial Negative Overflow Set **[MCP ONLY]** ***AL4*** **[VPNOS]**

Totaliz.P- overflow value set

CPU MaX.recorded temperature **[MCP ONLY]** ***AL6*** **[CPUMX]**

CPU max.recorded temperature

CPU MiN.recorded temperature **[MCP ONLY]** ***AL6*** **[CPUMN]**

CPU min.recorded temperature

Board T1 MaX.recorded temperature **[MCP ONLY]** ***AL6*** **[BT1MX]**

T1 max.recorded temperature

Board T1 MiN.recorded temperature **[MCP ONLY]** ***AL6*** **[BT1MN]**

T1 min.recorded temperature

Board T2 MaX.recorded temperature **[MCP ONLY]** ***AL6*** **[BT2MX]**

T2 max.recorded temperature

Board T2 MiN.recorded temperature **[MCP ONLY]** ***AL6*** **[BT2MN]**

T2 min.recorded temperature

Calibration OFset Register 0 **[MCP ONLY]** ***AL6*** **[COFR0]**

Calibration offset register 0

Calibration OFset Register 1 **[MCP ONLY]** ***AL6*** **[COFR1]**

Calibration offset register 1

The manufacturer guarantees only English text available on our web site www.isoil.com

Calibration GAin Register 0	**[MCP ONLY]**	***AL6***	**[CGAR0]**

Calibration gain register 0

Calibration GAin Register 1	**[MCP ONLY]**	***AL6***	**[CGAR1]**

Calibration gain register 1

Calibration GAin Register 2	**[MCP ONLY]**	***AL6***	**[CGAR2]**

Calibration gain register 2

Calibration GAin Register 3	**[MCP ONLY]**	***AL6***	**[CGAR3]**

Calibration gain register 3

Calibration GAin Register C	**[MCP ONLY]**	***AL6***	**[CGARC]**

Calibration gain register C

The manufacturer guarantees only English text available on our web site www.isoil.com

MENU 14 - FILE (ONLY MCP)

File Transfer ABoRt	**[MCP ONLY]**	***AL2***	**[FTABR]**

Abort the current File Transfer

File Transfer STAte	**[MCP ONLY]**	***AL0***	**[FTSTA]**

Show the File Transfer state

Read Last EVenTs	**[MCP ONLY]**	***AL2***	**[RLEVT]**

Read the latest system events

Read All EVenTs	**[MCP ONLY]**	***AL2***	**[RAEVT]**

Read all current system events

Read Last Logged DaTa	**[MCP ONLY]**	***AL2***	**[RLLDT]**

Read the latest logged data

Read All Logged DaTa	**[MCP ONLY]**	***AL2***	**[RLLDT]**

Read all current logged data

Read Last Sensor Verify Data	**[MCP ONLY]**	***AL2***	**[RLSVD]**

Read the latest sensor ver. data

Read All Sensor Verify Data	**[MCP ONLY]**	***AL2***	**[RASVD]**

Read all sensor verify data

File SEND	**[MCP ONLY]**	***AL2***	**[FSEND]**

Set file name for read operation

File ReCeiVE	**[MCP ONLY]**	***AL5***	**[FRCVE]**

Set file name for write operation

File ReCeive APpend mode	**[MCP ONLY]**	***AL5***	**[FRCAP]**

Set file name for write-append

File OFFSet position	**[MCP ONLY]**	***AL2***	**[FOFFS]**

Set file offset position

ConFiGuration file WRite	**[MCP ONLY]**	***AL2***	**[CFGWR]**

Save the configuration to a file

ConFiGuration file ReaD	**[MCP ONLY]**	***AL2***	**[CFGRD]**

Read the configuration from file

The manufacturer guarantees only English text available on our web site www.isoil.com

FuNCtion list file WRite	**[MCP ONLY]**	***AL2***	**[FNCWR]**

Save the functions list to file

Function Enable Status WRite	**[MCP ONLY]**	***AL6***	**[FESWR]**

Save function enable status to file

Quick Start function Status WRite	**[MCP ONLY]**	***AL6***	**[QSSWR]**

Save quick start function enable.

The manufacturer guarantees only English text available on our web site www.isoil.com

MENU 15 - PROCESS DATA (ONLY MCP)

OUTput 1 Set	**[MCP ONLY]**	***ALO***	**[OUT1S]**

Set value for digital output 1

OUTput 2 Set	**[MCP ONLY]**	***ALO***	**[OUT2S]**

Set value for digital output 2

Digital INput 1 Status	**[MCP ONLY]**	***ALO***	**[DIN1S]**

Digital input 1 status read

Flow Rate Full Scale in chosen Units	**[MCP ONLY]**	***ALO***	**[FRFSU]**

F.rate f.scale in chosen units

Flow Rate Value PerCentage	**[MCP ONLY]**	***ALO***	**[FRVPC]**

Flow rate value in percentage

Flow Rate Value Percentage without cut-off	**[MCP ONLY]**	***ALO***	**[FRVPX]**

F.rate in perc.without cut-off

Flow Rate Value Binary without cut-off	**[MCP ONLY]**	***ALO***	**[FRVBX]**

F.rate in binary.without cut-off

Flow Rate Value Technical Unit	**[MCP ONLY]**	***ALO***	**[FRVTU]**

F.rate value in unit of measure

Volume Totalizer Total Positive Value	**[MCP ONLY]**	***ALO***	**[VTTPV]**

Totaliz.T+ read value

Volume Totalizer Partial Positive Value	**[MCP ONLY]**	***ALO***	**[VTPPV]**

Totaliz.P+ read value

Volume Totalizer Total Negative Value	**[MCP ONLY]**	***ALO***	**[VTTNV]**

Totaliz.T- read value

Volume Totalizer Partial Negative Value	**[MCP ONLY]**	***ALO***	**[VTPNV]**

Totaliz.P- read value

Volume Totalizer Total Positive Overflow	**[MCP ONLY]**	***ALO***	**[VTTPO]**

Totaliz.T+ number of overflows

Volume Totalizer Partial Positive Overflow	**[MCP ONLY]**	***ALO***	**[VTPPO]**

Totaliz.P+ number of overflows

Volume Totalizer Total Negative Overflow	**[MCP ONLY]**	***ALO***	**[VTTNO]**

Totaliz.T- number of overflows

The manufacturer guarantees only English text available on our web site www.isoil.com

Volume Totalizer Partial Negative Overflow	**[MCP ONLY]**	***ALO***	**[VTPNO]**

Totaliz.P- number of overflows

Board TeMPeratures	**[MCP ONLY]**	***ALO***	**[BTMPS]**

Board temperatures

CPU temperature	**[MCP ONLY]**	***ALO***	**[CPUTP]**

CPU temperature

Sensor CoiLs TemPerature	**[MCP ONLY]**	***ALO***	**[SCLTP]**

sensor's coils temperature

LiQuid VELocity	**[MCP ONLY]**	***ALO***	**[LQVEL]**

Liquid velocity

AVeraGe process data Samples Number	**[MCP ONLY]**	***ALO***	**[AVGSN]**

N.of samples for averaged values

ALARM status	**[MCP ONLY]**	***ALO***	**[ALARM]**

Active alarm(s) status

Sensor TeSt Result Code	**[MCP ONLY]**	***ALO***	**[STSRC]**

Sensor test result code

Main power status	**[MCP ONLY]**	***ALO***	**[MPWRS]**

Status of main power supply

INput RESistance	**[MCP ONLY]**	***ALO***	**[INRES]**

Equivalent Input resistance

INput VoLtageS	**[MCP ONLY]**	***ALO***	**[INVLS]**

Electrodes input voltages

System Battery Voltage	**[MCP ONLY]**	***ALO***	**[SBVLT?]**

View battery voltage

System Battery Charge Status	**[MCP ONLY]**	***ALO***	**[SBCHS?]**

View system battery charge status

Measure BUFFers	**[MCP ONLY]**	***ALO***	**[MBUFF]**

Measure buffers data read

SEQuence NumBer	**[MCP ONLY]**	***ALO***	**[SEQNB]**

Sequence number

The manufacturer guarantees only English text available on our web site www.isoil.com

METER DATA

This function allows the import of data from one converter to another up to level 4 included.
The hardware configurations and the corresponding calibration values are not restored.
The "data import" procedure can be performed **one time only,** since the directory, according to the board's SERIAL NUMBER, will be renamed.

OPERATING PROCEDURE TO CHANGE THE CONVERTER BOARD

Remove the 4 screws (see "MV210 construction" page10) to remove the main housing. Attention of any electrical cables.

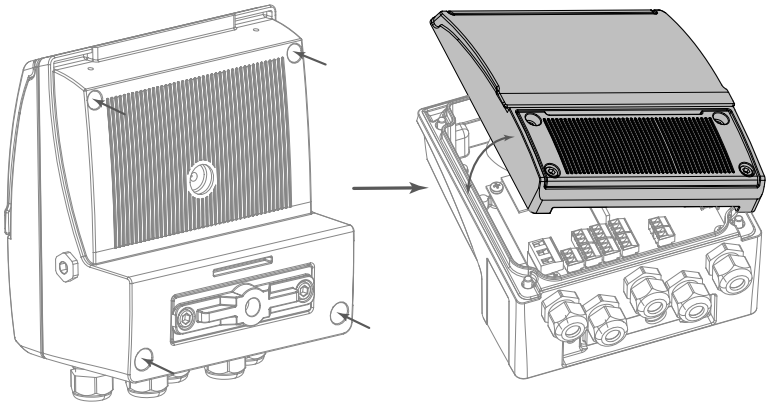

Remove the 4 screws (see "MV210 construction" page10) to remove the MV210 board. Attention of any electrical cables. Remove the SD card and insert the new MV210 board.

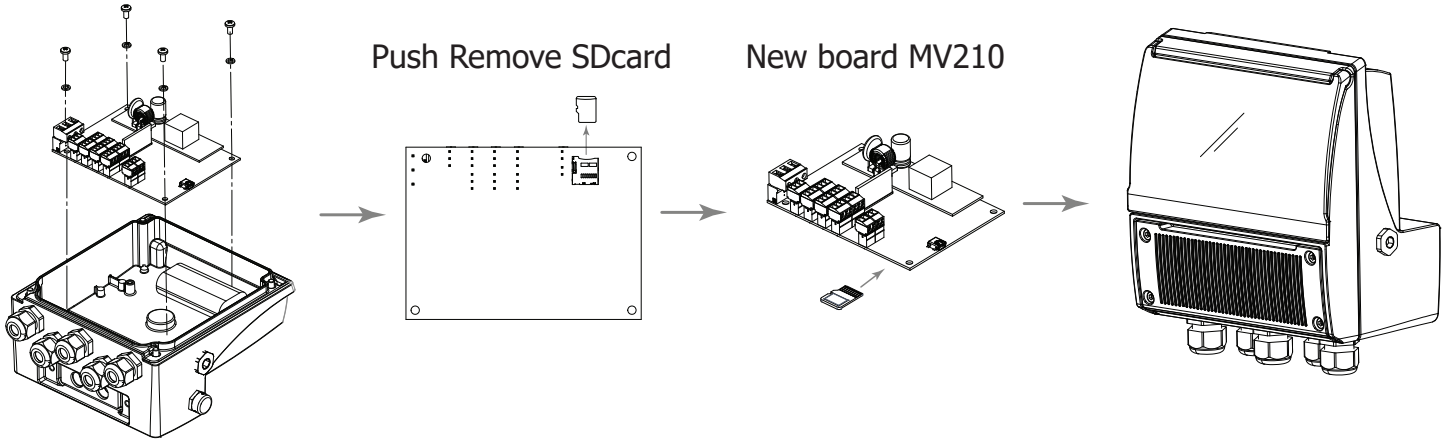

Assembled the card turn on the converter and enable [Save Conv. F. def.] function to restore data.

View function "11.8" page30.

The manufacturer guarantees only English text available on our web site www.isoil.com

B.I.V. (BUILT-IN VERIFICATOR)

BIV, abbreviation for Built In Verificator, is available as option for MV210 converters and must be enabled by the manufacturer. It is also necessary that the SD card is activated to store saved data. The analysis of collected data performed by a dedicated IsoBIV software running on another device (PC). The simplicity of test procedures minimize the risk of handling errors; maximum safety and reliability thanks to the traceable factory calibration and internal references complement the safety by design principle with minimal failure rates
IsoBIV allows to create and print a report as validation of device functionality/measure error.

Operation and Conditions of Use.

The system is based on periodic measurements performed every hour or using a manual command (MCP command = SVERC). The sensor parameters are measured and compared with previously measured and stored reference values. Each time the system performs a series of measurements on the sensor and records them in a file called "STESTLOG.CSV", which resides in the main directory of the SD memory of the converter.

The sensor test can also be carried out without the active BIV system, but in this case only the presence of isolation losses and the overall good functioning of the sensor such the coil resistance, the excitation current and the rising times of the current within the generic limits that guarantee operation.
Instead if BIV is active, the measurements are deeper and the measured values are tested by comparing them with a set of characteristic sensor parameters measured at the time of installation.

Saving Reference Values (Characteristic Parameters)

After sensor installation, the parameters that will be used as reference for the BIV system and the IsoBIV data analysis software must to be measured.
The characteristic values of the coil circuits are saved in the converter memory at the factory before to ship the instrument. For the reference measure of the electrodes circuits, there is a specific function that perform the measures of voltage and resistance at the installation site. This function is managed ONLY by the IsoBIV program, which through a simple wizard will set the converter to perform the measures in the specific measurement point where the meter is installed.

To activate BIV, these functions must be verified:

- **[ASVFE=1]** : It enable the sensor's automatic test every hour. The ASVFE function in Menu 1 with access level 3 can be also activated using the instrument's display.

This feature can be enabled even if the SD card is not installed and if the BIV function is not active; in such a case the sensor file is NOT created and any alarms will be generated either if the data deviation from the reference data is outside the sesnor's limits.
Practically, in the absence of the necessary hardware permissions, this function is useful to test the insulation of the coils.

The manufacturer guarantees only English text available on our web site www.isoil.com

Opening and reading manually the files STESTLOG.CSV

The list below describes the steps for saving and reading STESTLOG.CSV file.

❑ OPEN INTERFACE STARTING THE PROGRAM MCP

❑ FOLLOW THE STEPS HERE BELOW

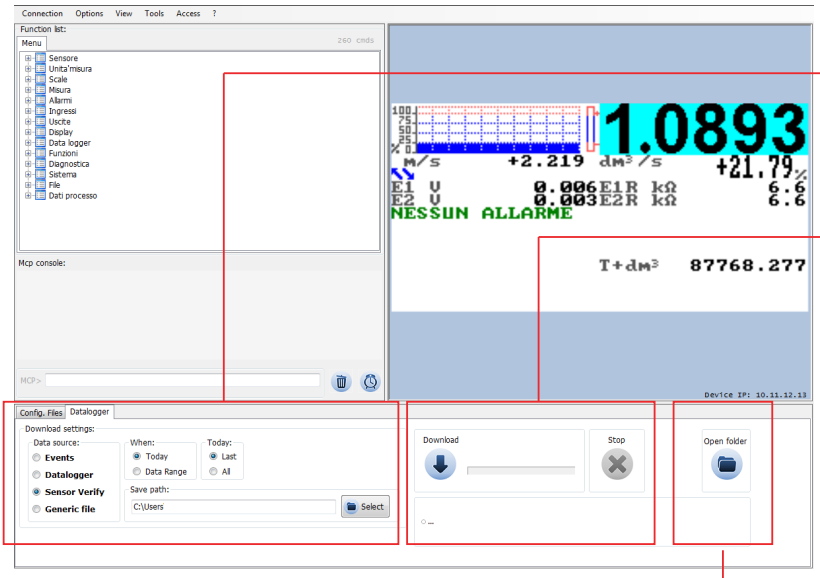

1
- Select Sensor Verify
- Choose the date or reference period of the which one wants to carry out the evaluation of the c
- Choose the directory where to save the file

2
Press Download to download the file.
Press Download to download the file.
At the end of the download the stestlog.csv file will be automatically opened by the program

Search for the consultation of the files inside of the drive SD card.

Path structure for searching the files in the SD card of the converter

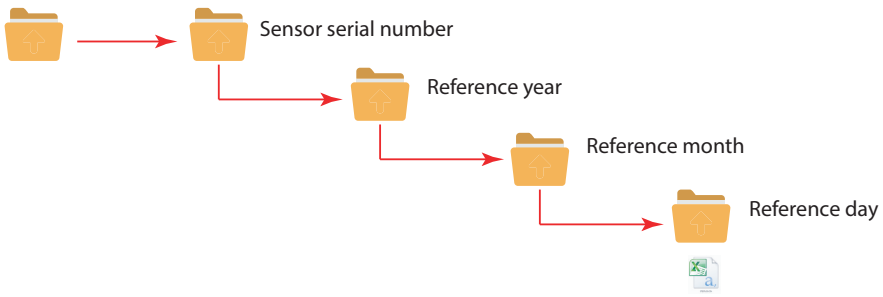

The manufacturer guarantees only English text available on our web site www.isoil.com

❑ READING AND MEANING OF FILE STESTLOG.CSV

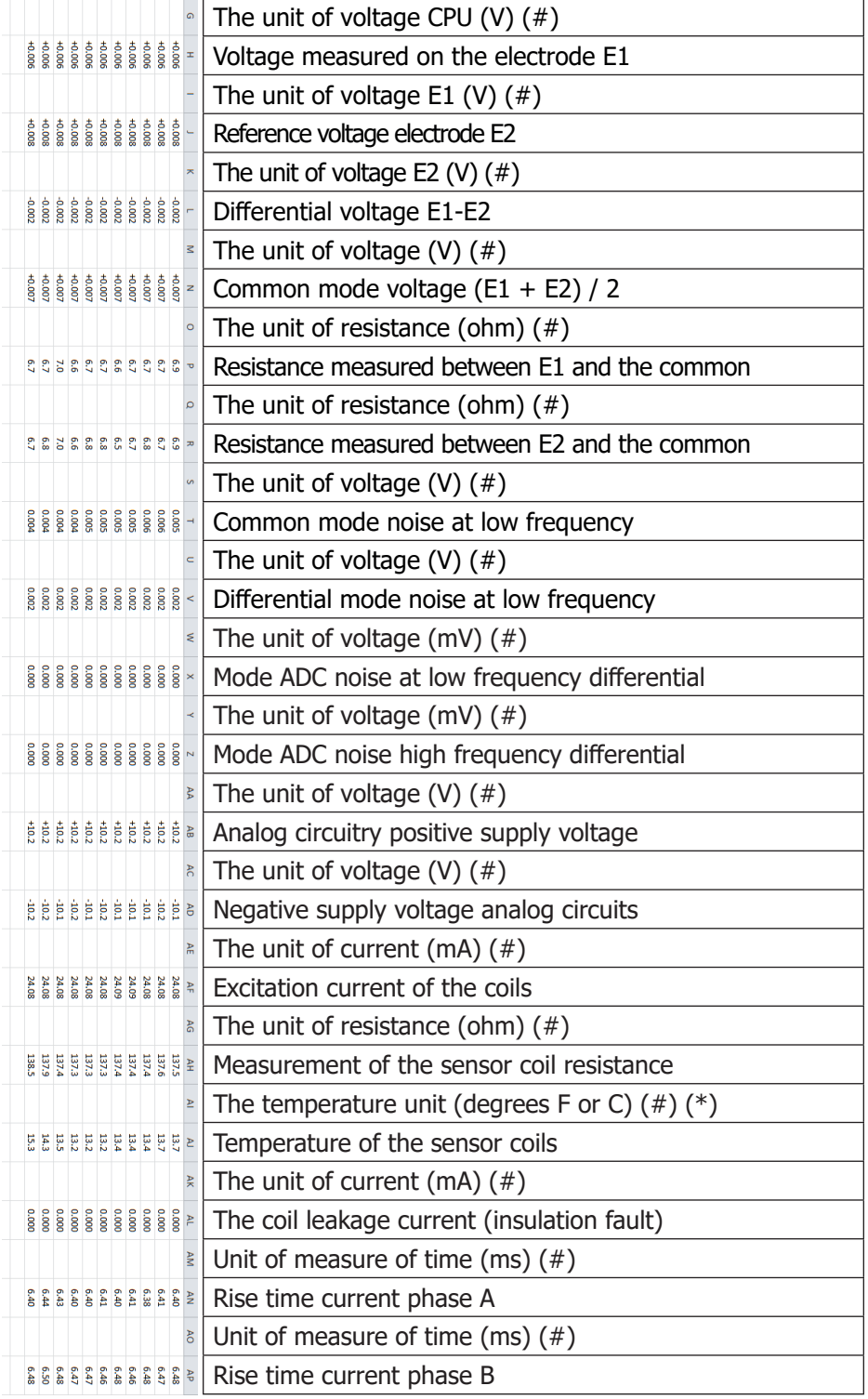

Registration Number
Data
Hour
Error code in hexadecimal format (0 = no error)
The temperature unit (degrees F or C) (#) (*)
CPU temperature
The unit of voltage CPU (V) (#)
Voltage measured on the electrode E1
The unit of voltage E1 (V) (#)
Reference voltage electrode E2
The unit of voltage E2 (V) (#)
Differential voltage E1-E2
The unit of voltage (V) (#)
Common mode voltage (E1 + E2) / 2
The unit of resistance (ohm) (#)
Resistance measured between E1 and the common
The unit of resistance (ohm) (#)
Resistance measured between E2 and the common
The unit of voltage (V) (#)
Common mode noise at low frequency
The unit of voltage (V) (#)
Differential mode noise at low frequency
The unit of voltage (mV) (#)
Mode ADC noise at low frequency differential
The unit of voltage (mV) (#)
Mode ADC noise high frequency differential
The unit of voltage (V) (#)
Analog circuitry positive supply voltage
The unit of voltage (V) (#)
Negative supply voltage analog circuits
The unit of current (mA) (#)
Excitation current of the coils
The unit of resistance (ohm) (#)
Measurement of the sensor coil resistance
The temperature unit (degrees F or C) (#) (*)
Temperature of the sensor coils
The unit of current (mA) (#)
The coil leakage current (insulation fault)
Unit of measure of time (ms) (#)
Rise time current phase A
Unit of measure of time (ms) (#)
Rise time current phase B

NOTE:
(#): The units are registered only if the appropriate function of the DATA LOGGER is active. Otherwise the field is empty.
(*): The temperature values can be expressed in degrees F or C, depending on the drive configuration

The manufacturer guarantees only English text available on our web site www.isoil.com

Standard and internal check to the instrument limits

The measured data are compared with the reference values previously stored. The variation of different variable measured,shall be within the following range:

- ❑ Coil temperature (using resistance reading): within limits compatible with the lining material
- ❑ Current up times: change% detected resistance coils + 10% (tolerance range)
- ❑ Resistance between electrodes and common: between 0.3 and 3.0 times the reference early strength
- ❑ Leakage current (insulation test): less than 0.1 mA

If the values deviate beyond these limits it is generated and displayed a coded alarm.
The alarm remains active and visible on the display until next test (max. 1 hour).

SOFTWARE ISOBIV

The IsoBiv software allows analysis and processing of STESTLOG.CSV file data.

The manufacturer guarantees only English text available on our web site www.isoil.com

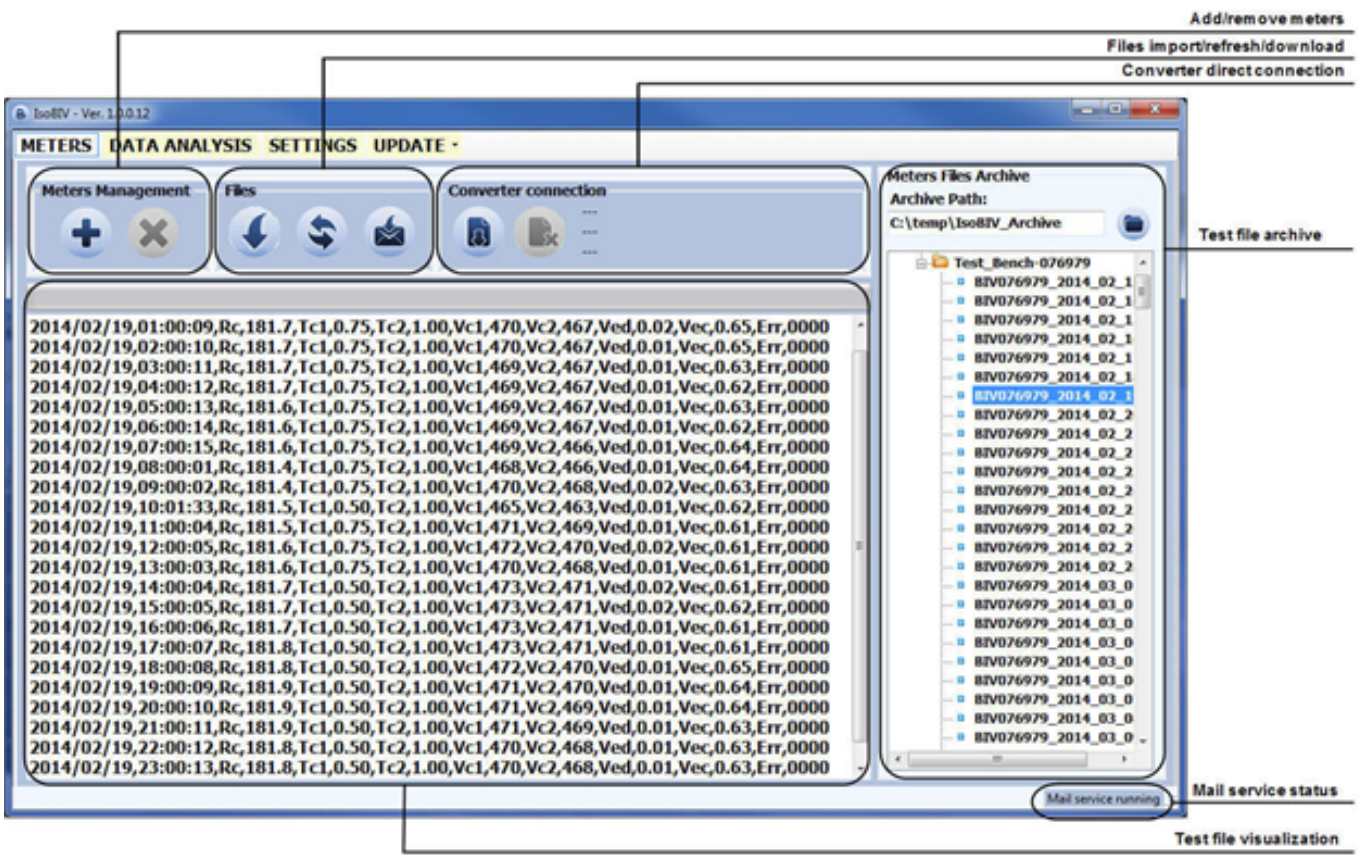

For further information, refer to the manual of ISOBIV software.

ALARM MESSAGES (CAUSES AND ACTIONS TO BE TAKEN)

MESSAGE	CAUSES	ACTION TO TAKE
NO ALARMS	All works regularly	---
[000] SYSTEM RESTART	---	---
[001] INTERNAL PS FAIL	Internal supply voltage error	Contact the service
[002] CLOCK NOT SET	System Clock not set	Set the system clock from the converter menu 13 (see also MCP function).
[003] SD CARD FAILURE	SD card not found or unreadable	check and/or replace SD card
[005] F-RAM ERROR	Error writing / reading Flash-RAM	Contact the service
[006] EXCITATION ERROR	The excitation of the sensor coils resulting from cable is interrupted	Check the connecting cables to the sensor.
[007] SIGNAL ERROR	The measure is strongly effected by external noise or the cable connecting the converter to the sensor is broken.	Check the status of the cables connecting the sensor, the grounding connections of the devices and the possible presence of noise sources.
[008] PIPE EMPTY	The measuring pipe is empty or the detection system has not been properly calibrated.	Check whether the pipe is empty or repeat the empty pipe calibration procedure.
[009] FLOW>MAX+	The flow rate is higher than the maximum positive threshold set.	Check the maximum positive flow rate threshold set and the process conditions.
[010] FLOW>MAX-	The flow rate is higher than the maximum negative threshold set.	Check the maximum negative flow rate threshold set and the process conditions.
[011] FLOW<MIN+	The flow rate is lower than the minimum positive threshold set.	Check the minimum positive flow rate threshold set and the process conditions.
[012] FLOW<MIN-	The flow rate is lower than the minimum negative threshold set.	Check the minimum negative flow rate threshold set and the process conditions.
[013] FLOW>FULL SCALE+	The flow rate is higher than the full scale positive value set on the instrument.	Check the full scale positive value set on the instrument and the process conditions.
[014] FLOW>FULL SCALE-	The flow rate is higher than the full scale negative value set on the instrument.	Check the full scale negative value set on the instrument and the process conditions.
[015] PULSE1>RANGE	The pulse generation output 1 of the device is saturated and cannot generate the sufficient number of impulses.	Set a bigger unit of volume or, if the connected counting device allows it, reduce the pulse duration value.
[016] PULSE2>RANGE	The pulse generation output 2 of the device is saturated and cannot generate the sufficient number of impulses.	Set a bigger unit of volume or, if the connected counting device allows it, reduce the pulse duration value.
[017] CALIBR.ERROR	Calibration Error	Contact the service
[018] SYSTEM FREQ.ERR	System Freq. Error	Contact the service
[019] B.DATA NOT INIT	Uninitialized data system	Contact the service
[020] FL.SENSOR ERROR	Flow rate sensor error	Contact the service
[021] BATTERY LOW	(Rechargeable) battery depleted	Contact the service to Replace the battery
[022] BATTERY V>MAX	Battery voltage (rechargeable)> max. Allowed	Contact the service to Replace the battery
[023] BATTERY I>MAX	Battery charge current> max. allowed	Contact the service to Replace the battery
[024] MAIN PS V.ERR	Main supply voltage (+ 5V) out of tolerance.	Contact the service
[025] USB VOLTAGE ERR	Voltage of USB connection out of tolerance.	Contact the service
[026] SDC ALMOST FULL	SD card space <500 MB.	For more information see function "12.9" page30.
[027] SDC FULL	SD card out of memory	Memory Full. You can not save logger. Contact the service to replace the SD memory.
[028] BATT.TEMP.CRIT	The battery can not be charged. The temperature is out of range (detected temperature <0 C° or temperature >50°)	Wait for the normal temperature reset. View Environmental Use Conditions "Environmental Use Conditions" page5.
[030] BATCHING ERROR	This error activates in two conditions (see "BATCHING" page 45)	Check the status of the actuator and the system

The manufacturer guarantees only English text available on our web site www.isoil.com

ERROR CODE TEST SYSTEM OF SENSOR

The codes are in hexadecimal format, the meaning is given for each bit. There are several possible error simultaneous combinations (more bits active) then that will give the combined numerical codes.

CODE	ANOMALIES DESCRIPTION	ACTION TO TAKE
0000	NO ERROR	---
0001	SENSOR TEST INSULATION: Generator power too low	Contact the service
0002	SENSOR TEST INSULATION: Generator power too high	
0004	SENSOR TEST INSULATION: Phase 1 generator voltage too low	
0008	SENSOR TEST INSULATION: Phase 1 generator voltage too high	
0010	SENSOR TEST INSULATION: Phase 1 terminal voltage coils 1 too low	
0020	SENSOR TEST INSULATION: Phase 1 terminal voltage coils 2 too low	
0040	SENSOR TEST INSULATION: Phase 2 generator voltage too low	
0080	SENSOR TEST INSULATION: Phase 2 generator voltage too high	
0100	SENSOR TEST INSULATION: Phase 2 terminal voltage coils 1 too low	
0200	SENSOR TEST INSULATION: Phase 2 terminal voltage coils 2 too low	
0400	SENSOR TEST INSULATION: Insulation loss, leakage current out of tolerance	Check: ❑ wiring between sensor converter ❑ conditions of use ❑ set parameters If the problem persists contact the service
0800	TEST TEMPERATURE (RESISTANCE) COILS: Temperature (resistance) out of tolerance	
1000	TEST TIME GETTING ON CURRENT PHASE (A): Value out of tolerance	
2000	TEST TIME GETTING ON CURRENT PHASE (B): Value out of tolerance	
4000	TEST RESISTANCE INPUTS ELECTRODES: Input value 1 out of tolerance	
8000	TEST RESISTANCE INPUTS ELECTRODES: Input value 1 out of tolerance	

The manufacturer guarantees only English text available on our web site www.isoil.com

At the end of its lifetime, this product shall be disposed of in full compliance with the environmental regulations of the state in which it is located.

The manufacturer guarantees only English text available on our web site www.isoil.com

MANUAL REVIEWS

REVIEW	DATE	DESCRIPTION
210_EN_IT_R0_1.00.0	31-01-2020	First edition
210_EN_IT_R0_1.02.0	03-07-2020	Software update, batching function added

The manufacturer guarantees only English text available on our web site www.isoil.com

The manufacturer guarantees only English text available on our web site www.isoil.com

ISOIL INDUSTRIA S.p.A.

HEAD OFFICE	SERVICE
Via Fratelli Gracchi, 27 20092 Cinisello Balsamo (MI) Tel +39 02 66027.1 Fax +39 02 6123202 sales@isoil.it	isomagservice@isoil.it

If you want to find the complete list of our distributors access at the following link:
http://www.isoil.it/en

Due to the constant technical development and improvement of its products, the manufacturer reserves the right to make changes and/or modify the information contained in this document without notice.

ISOIL INDUSTRIA
The solutions that count